azbil

2013 Vol. 4
azbil Group PR magazine

azbil FIELD **Nippon Kodoshi Corporation**

azbil MIND **Yamatake Memorial opened to present the history of Azbil Corporation, including the founder's aspiration, past products, and future activities**

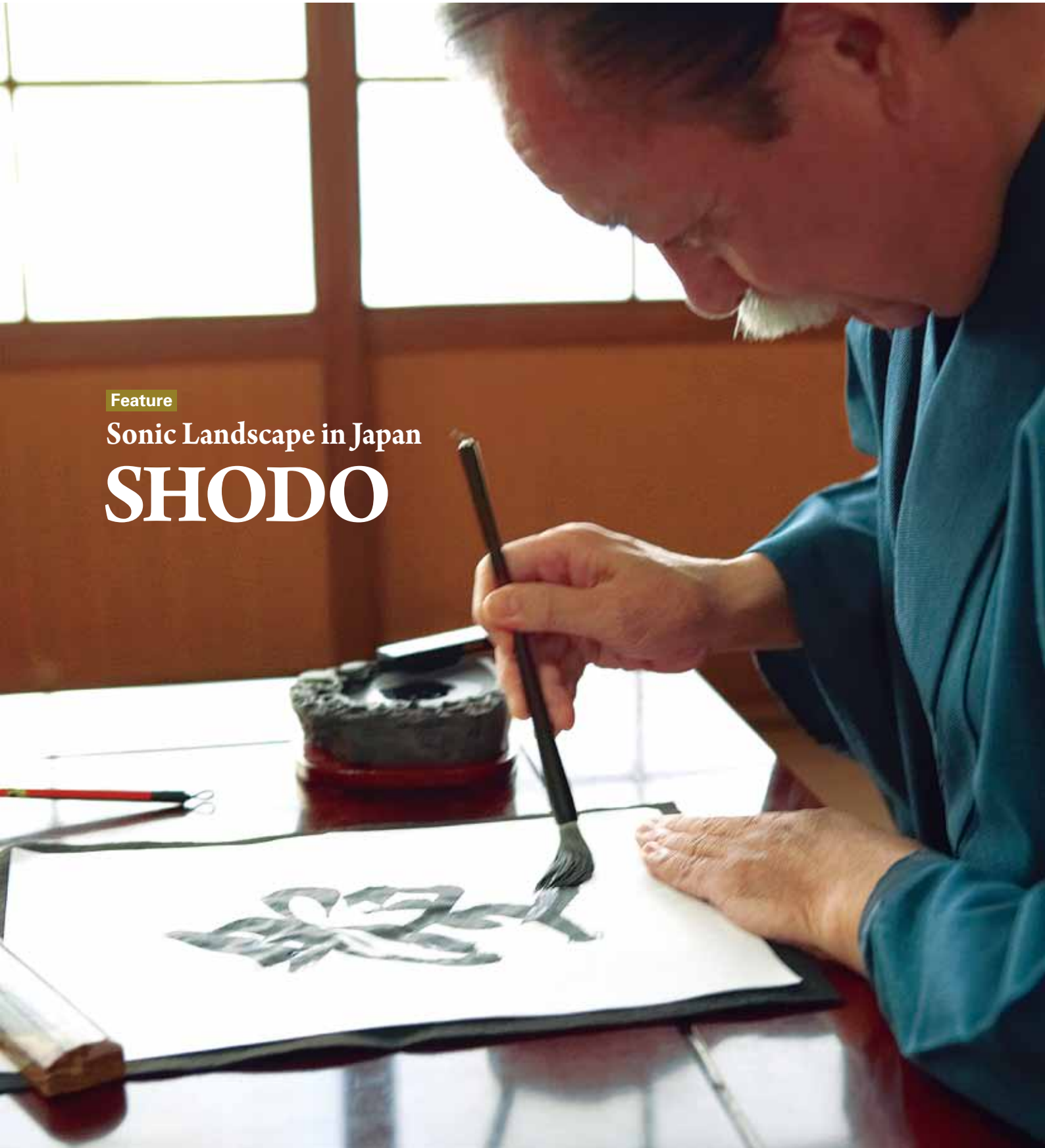

Feature

Sonic Landscape in Japan
SHODO

書道 SHODO

【Shu, Shu】 ～しゅっ、しゅっ

Shodo *(the way of writing), in which you write letters on* **washi** *(Japanese paper) with a* **fude** *(brush) dipped in* **bokuju** *(liquid ink), is something like calligraphy. The writer maintains good posture, moves the brush slowly on a sheet of Japanese paper, and carefully writes each stroke. The end of a stroke is not completed simply by stopping the brush.*

*There is a variety of ways to use the brush to end a stroke such as "***hane***," in which the direction of the stroke is sharply turned, and "***harai***," in which the line is made thinner toward its end by bringing the brush up. At that time, when the brush moves lightly on the paper, a soft rustling sound is emitted, which is expressed by the onomatopoeia "***shu, shu***" in Japanese. The more advanced and experienced in* **shodo** *one becomes, the more beautiful his/her movements become, and his/her act of writing itself is artistic.*

Eiji Happo (the eight basic strokes)

The *Eiji Happo* is a phrase that means that the eight most frequently used strokes in *shodo* are contained in the letter "永." With the letter "永," you can practice and learn how to move a fude effectively in *shodo*.

① ***Soku*** ... dot
② ***Roku*** ... horizontal stroke
③ ***Do*** (pronounced doh) ... vertical stroke
④ ***Teki*** ... flick from a horizontal or vertical stroke
⑤ ***Saku*** ... flick stroke toward upper right
⑥ ***Ryaku*** ... pullout stroke toward lower left
⑦ ***Taku*** ... short pullout stroke
⑧ ***Taku*** ... pullout stroke toward lower right

※ ⑦and ⑧are pronounced the same, but the *kanji* characters are different.

Concentrate your mind and move the brush on the sheet.

Shodo that has taken root in the Japanese culture

Shodo is an art originated in China and is used to express the beauty of letters. It is said that the history of Japanese *shodo* dates back to the time before Christ when *kanji* characters came over from China.

Japanese *shodo* rapidly developed in the mid 6th century when Buddhism was introduced, and *shakyo*, or transcribing of Buddhist sutras, was widely practiced. Chinese *shodo* was positively imitated in order to absorb the advanced Chinese culture until the end of the 9th century. When the sending of missions from Japan to China was stopped, however, *shodo* as the original culture of Japan started developing. *Kana* characters were created based on *kanji* characters and used together with *kanji*. While the Chinese-style *shodo* was called *karayo* and spread, the Japanese-style *shodo*, or *wayo*, *shodo*, emerged. Since then, *shodo* has been divided into *karayo shodo* and *wayo shodo* and each developed in its own way. The *hiragana* characters, created from the extreme cursive form of *kanji*, are uniquely curvy. Therefore, in *wayo shodo*, even the *kanji* has become somewhat curvy.

While *karayo shodo* spread exclusively among the intellectual class such as the *kangaku* (Chinese studies) and *jugaku* (Confucianism) scholars, *wayo shodo* spread widely among court nobles, warriors, and ordinary citizens. In the Edo Era (1603 - 1868), *wayo shodo* was taught in the educational facilities for the general public set up all over Japan. Thus, Japan at that time achieved the world's highest rate of literacy. On the other hand, with the arrival of the modern age, the study of classics became popular and *karayo shodo* predominated.

Kaisho (standard style) has been made the standard style in school education. Even now, elementary school third graders weekly take a class in *shodo* and practice writing *kanji* in the *kaisho* style.

Typical fonts used in *shodo* (All the photos show the same character "*Ryu*," meaning a dragon.)

Kaisho (Standard style)
Kaisho is the style in which each of the dots and lines are separate and the framework of the character is solid. This is the most basic form of a *kanji* character.

Gyosho (semi-cursive style)
The dots and lines are partially connected and the framework of the character is somewhat collapsed. If you know how to read the character in *kaisho*, you can read the character in *gyosho*.

Sosho (cursive style)
This is the form in which the strokes are considerably omitted. You cannot read or write the character unless you learn the omitted form of each character.

Grind the ink stick on the ink stone and quiet your mind

A *suzuri* (ink stone), *sumi* (ink stick), *fude* (brush), and *washi* (Japanese paper) are required to perform *shodo* and they are collectively called the Four Treasures of Calligraphy. The first procedure is to pour water in the ink stone and grind the ink stick to make liquid ink. *Shodo* starts with this procedure, during which time you quiet your mind. The side of the ink stone that is deeper where the liquid ink stands is called the "ocean," while the shallower side is called the "hill". When a sufficient amount of liquid ink is prepared, dip the brush in the liquid ink standing in the ocean. Then, tidy up the shape of the tip of the brush on the hill section, while adjusting the volume of the ink held in the brush. Then, write letters on a sheet of Japanese paper. In *shodo*, rewriting is not allowed. Concentrate, be focused and move the brush on the paper. You will feel your mind settle down as you move the brush and bask in the simple beauty generated by the contrast of black and white.

About four million people are said to enjoy *shodo* in Japan today. The *shodo* population has been on the increase in recent years after a long continuous decrease. This is because an increasing number of people who learned *shodo* while they were children and are now in their senior years are trying to relearn it. Spending time slowly grinding the ink stick and calmly facing the white paper is once again recognized as valuable in our modern high-tech society.

Tools used in *shodo*

Fude **(brush)**
A tool with a cluster of hair attached to the tip of the stem (thin stick made of bamboo tube, etc.)

Sumi **(ink stick)**
Soot compressed with *nikawa* (animal glue)*

Suzuri **(ink stone)**
A *suzuri* is made of stone, tile, etc. and used to grind *sumi* with water.

Washi **(Japanese paper)**
The paper is made in Japan from *mitsumata* (Edgeworthia chrysantha), *kozo* (Broussonetia papyrifera), *asa* (Cannabis), naturally-grown *gampi* (Diplomorpha sikokiana), etc.

* *Nikawa* is an organic protein made by heating animal skin, bone, etc. with water.

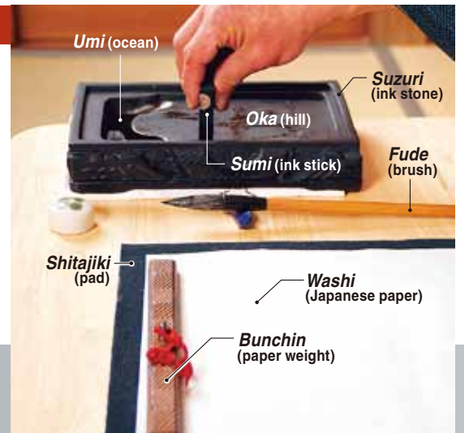

Nippon Kodoshi Corporation

Nippon Kodoshi Corporation has 70% of the global market for separators for electrolytic capacitors. When building a new plant in Yonago, Tottori Prefecture with a business continuity plan (BCP) in mind, the company designed and constructed a central control room(CCR) aimed at making monitoring and control of the plant floor more efficient. The application of the concept of "increasing the level of situation awareness" has produced dramatic effects in detail.

Aiming at higher efficiency by designing the space and information of the CCR

Nippon Kodoshi Corporation manufactures the separators (insulating paper)*1 for electrolytic capacitors, which are essential electronic components for electronic products such as automobiles, computers, and home electric appliances. Due to the rapidly increasing demand for lithium-ion batteries mainly in hybrid cars and solar and wind generation, Nippon Kodoshi has come to play an important role in the environmental and energy fields.

The company's plants are located in Kochi Prefecture. It has been anticipated in recent years that a great earthquake accompanied by a tsunami may cause damage throughout the prefecture. Should a disastrous earthquake occur, the company's product supply will be shut off, which will have a great influence on the global separator market. From the perspective of BCP, the company decided to construct a new plant in Yonago, Tottori Prefecture. Yonago was selected because, in spite of its easy access from Kochi, the probability of an earthquake and tsunami affecting Kochi and Yonago at the same time is very low.

Mr. Yamamura said: "Taking the opportunity of constructing a new plant, we decided to push forward a production innovation plan that had been carried out by the existing plants. At first, it would be essential to review the design of the CCR aiming to ensure higher efficiency for monitoring and controlling the plant floor."

Presenting the optimum operating environment design in computer graphics with the viewpoint of operators in mind

Nippon Kodoshi decided to use Azbil's consulting service for CCR design and to work on the establishment of a "mechanism to enhance the level of situation awareness" proposed by Azbil, which enables operators to rapidly detect a plant upset, diagnose a potential abnormal situation, and also make decisions and perform corrective action.

Mr. Ojima said: "Azbil Corporation has been extremely reliable because of its long proven track record and experience in our Kochi plants and plant floor. We expected that Azbil would design the optimum operating environment for our new plant."

When the CCR design was started in the spring of 2011, Azbil used a computer graphic representation method for sharing the design concept of the new CCR. Azbil not only provided a two-dimensional, bird's-eye view design drawing but also demonstrated how and what the operators in the CCR see from their viewpoint and what they can notice (see Photo 1). Both companies members considered the ideal working environment and monitor layout so that the operators can move smoothly, control the entire plant easily, and notice any changes in the plant sooner.

(Photo 1) Computer-generated image used during a discussion. The image represents a more realistic instrument panel room than a two-dimensional drawing does.

(Photo 2) The CCR from which the operators can monitor the inside of the plant while checking the control process with the DCS. The geometry of the desk has been designed with consideration given to human characteristics and operability.

Mr. Odagiri said: "The computer graphics gave us a clear image of the CCR. The computer graphics image was very useful for making improvements in CCR design and also extremely helpful for obtaining approval from the management."

Access to information integrates the CCR with the plant floor

The plant test operation began in June 2012, and the manufacturing facilities and CCR in the Yonago Plant went into full-scale operation at the end of October 2012. After the start of operation, various design measures taken under the concept of "increasing the level of situation awareness" have improved operation efficiency.

Specifically, a wide glass window was installed so that an operator can see the whole plant from the CCR. Also, by stacking the surveillance/control monitors one upon another without blocking the view, an operator can manipulate the distributed control system (DCS)*2 while observing the plant floor with his own eyes.

Azbil made meticulous arrangements with each operator about the angle of the monitors and the height and size of the chairs and other office supplies and fixtures, which greatly enhanced operability. The plant floor status, information from the DCS, and communication among operators in the CCR were also integrated into one place. These improvements enable the operators to rapidly make the most appropriate decision and judgment and take accurate corrective action (see Photo 2).

Mr. Komatsu said: "In the existing plants, two or more monitors were arranged in a row. Since an operator called up operational graphics and trend graphs one by one on the screen, the difference in experience and capability among operators caused inconsistency in monitoring or operation. In the new plant, a wide monitor provides a window set function, which can display a set of operational graphics and trend graphs corresponding to the situation and provide accurate information, regardless of the operator. Using the window set function reduces the number of strokes (the operations to call up the graphics and graphs to the screen) than before. Also, the operation time to get to the requested information is shortened, then the speed of decision making is improved. Moreover, some design ideas such as coloration on each screen and how to present measurements were implemented so that an operator can easily notice any deviation from the normal control values. These design ideas help an operator to make proper and quick judgment based on accurate information."

Mr. Nakada said: "The CCR was designed considering actual operation and the traffic line so that the operators can work without feeling any stress. The DCS operation desk with enough leg space is another key factor contributing to improved operability."

Nippon Kodoshi expects that benefits from higher monitoring and control efficiency achieved at the Yonago Plant will contribute to not only reducing operators' workload and improving production efficiency and quality but also creating a "work place for acting innovatively" where ingenious ideas for the future are born.

Mr. Ojima said: "We are hoping to create an operating environment where an operator not only promptly responds to what is happening on the plant floor but also notices any signs of problems at an early stage."

Mr. Yamamura said: "I expect Azbil to continually provide strong support, from efficiency improvement on the plant floor by maintaining field instruments and systems to a proposal of a future vision."

Nippon Kodoshi Corporation Yonago Plant

Location

220-1 Nihongi, Yonago, Tottori Prefecture

Business scope

Manufacture and sale of the separators for capacitors such as aluminum electrolytic capacitors and conductive polymer solid capacitors; the separators for batteries such as alkaline batteries, lithium-ion batteries, and nickel hydride batteries.

Mr. Yasuo Yamamura
Director
General Manager Production Division
Yonago Plant Manager

Mr. Hitoshi Ojima
General Manager
Production Department

Mr. Masaki Odagiri
Manager
Production Technical Section
Production Department

Mr. Jun Komatsu
Supervisor
Production Technical Section
Production Department

Mr. Yukiharu Nakada
Production Technical Section
Production Department

glossary

1▶ Separator (Insulating paper)
Ultrasmall, extremely thin paper component used to separate the anode (+) from the cathode (-) of the capacitor or battery and regulate the electric current.

2▶ DCS (Distributed control system)
A system that monitors and controls the manufacturing process or production facilities in plants and factories. To achieve even distribution of load, the DCS distributes the functions of each device over a network, resulting in safety and excellent maintainability.

azbil MIND vol.12

Yamatake Memorial opened to present the history of Azbil Corporation, including the founder's aspiration, past products, and future activities

Azbil Corporation opened the Yamatake Memorial on the premises of its Fujisawa Technology Center in Fujisawa, Kanagawa, in January 2013 to exhibit the history and past products of Azbil from its foundation in 1906 to the present day. The Yamatake Memorial presents the changes in automation (automatic control) in Japan and the history and achievements of Azbil that has led the automation field in Japan for more than 100 years and contributed to people's daily lives. The memorial was established as a place to introduce the azbil Group's activities and philosophy to many stakeholders.

Exhibition space to present Azbil's achievements of more than 100 years since its foundation

Azbil marked its 100th anniversary in 2006 when it formulated a new group philosophy, "human-centered automation," and created a group symbol, "azbil," to represent this philosophy. In April 2012, "Yamatake," the corporate name since its foundation in 1906, was changed to Azbil Corporation for a fresh start. On that occasion, an in-house project was started so that the name "Yamatake" would prevail and its spirit would be handed down. This became the project to open the "Yamatake Memorial" to present the major events and achievements throughout the more than 100-year history of Azbil, with the spirit of "温故知新 (Onkochishin)," a proverb that means "Visiting the old, learning the new."

Azbil published "100 Years of Yamatake" on the occasion of its 100th anniversary. The completed book was distributed to customers for a better understanding of Azbil. The Yamatake Memorial, on the other hand, is positioned as a place for customers, partners, investors, and students to learn about the history of automation (automatic control) in Japan and the achievements of Azbil that has contributed to people's daily lives through automation of Japanese industries and buildings.

This exhibits the history of building automation. The products shown, which supported modern buildings and were used in skyscrapers and buildings that operate around the clock, are displayed along side the SAVIC2000, our main product in the latter half of the 1980's.

The Yamatake Memorial project was started by those who were involved in the compilation of "100 Years of Yamatake" and key persons thoroughly familiar with the company's history. Also around this time it was decided to build a new model house for conducting experiments of the company's Kikubari residential central air-conditioning system in a different location on the premises of the Fujisawa Technology Center. Therefore, the old model house was renovated for use as the Yamatake Memorial. The project members considered and discussed the layout of the exhibition rooms and the contents of the exhibits.

Exhibition rooms where visitors can follow and learn the history of industrial and building automation in chronological order

The Yamatake Memorial was opened on January 17, 2013. It has 8 exhibition rooms covering a total floor area of 200 square meters (2,153 square feet). Each room features the products that played a major role in their time together with explanatory panels. By following the specified route in the memorial, visitors will learn the history of Azbil that has developed its philosophy from "Freeing people from drudgery" to "Savemation," and further to "human-centered automation," along with the history of industrial and building automation.




1 After its foundation, Yamatake Shokai Co., Ltd. transformed from a trading company to a manufacturing company, as its product line changed from machine tools to industrial instruments.

2 The company produced electric cooked-rice containers and foot warmers for home use to protect the jobs of employees, and successfully overcame the difficult time after World War II when jobs were scarce.

3 The section for industrial automation features the change from pneumatic to electric and from analog to digital instrumentation, and the development of distributed control systems. The TDCS2000 plant control system is on display.

4 This section explains Azbil's future activities of building a new world with customers by combining the know-how and technologies of the BA, AA, and LA businesses. Digital tools are made available for easy understanding of the exhibit contents.

The first exhibition room on the route is for the exhibits regarding the founder, Takehiko Yamaguchi. When he graduated from the Tokyo School of Mechanics (Tokyo Institute of Technology at present), he became acquainted with Korekiyo Takahashi who later became the Japanese Prime Minister. On referral from Korekiyo Takahashi, Takehiko received support from Zenjiro Yasuda, the founder of Yasuda Conglomerate, and visited factories in Europe and the U.S. to learn the technologies of advanced countries. After his return to Japan, he founded Yamatake Shokai Co., Ltd., the roots of Azbil, in 1906 to realize his dream of becoming a successful entrepreneur. The episode of how Takehiko imported machine tools from Europe when he started the business is presented in this room together with the passport he used to go abroad.

Following the route further, you will see a series of exhibits of the time when Azbil transformed from a trading company of machine tools and other instruments to a domestic manufacturer, the time when the company started anew in the difficult period after the Pacific War, and then grew into a comprehensive automation manufacturer in the industrial and building fields, benefiting from the rapid growth of the Japanese economy and based on the alliance and collaboration with Honeywell Inc. (Honeywell International Inc. at present). The route continues further on to the recent years when Azbil expanded to the Life Automation field and strengthened global operations, and eventually to the company's future activities.

The group of products, exhibited in the order of the above history, include industrial instruments made before the Pacific War, an electric cooked-rice container and electric foot warmer manufactured right after the war, various analog panel instruments popularly used during Japan's high-economic-growth period; as well as the TDCS2000, a plant control system, the EOS enhanced operator station, and the SAVIC2000, a building air-conditioner control system, which came after the start of the digital age. This assembly of valuable materials enables visitors to learn the history of Building Automation (BA), Advanced Automation (AA), and Life Automation (LA) with reality.

Azbil will make use of its solid technological capabilities, backed by its achievements throughout its history of more than 100 years, for future business development

Thus, the Yamatake Memorial hopes to make the "azbil" brand known to many stakeholders by presenting the achievements that have supported each industry from the past to the present and the activities of the azbil Group for the future, under the keyword of automation. For customers who are already using azbil products and services in the respective areas of the BA, AA, and LA businesses, the memorial helps them to understand that the azbil Group is capable of providing comprehensive solutions on a one-stop shop basis and across businesses lines. Based on its achievements of more than 100 years and the solid technological capabilities that have been handed down from Yamatake to Azbil, the azbil Group will continue to solve problems together with customers at their sites to provide value for the next 100 years.


The former model house for conducting experiments of the Kikubari central air-conditioning system was renewed and opened as the Yamatake Memorial in January 2013.

Chiller Plant Energy-Saving Solutions

By means of precise control of chiller equipment in offices and plants, it is possible to cut peak period use of electricity and achieve energy-efficient operation.

The amount of energy used for air conditioning accounts for over 30 percent of total energy consumption in office buildings, leaving significant room for reduction.

Our chiller plant energy-saving solutions offer a wide range of options for saving energy, including selective equipment replacement without large investment, and total facility replacement along with the introduction of high-efficiency equipment.

Overview of energy-saving control

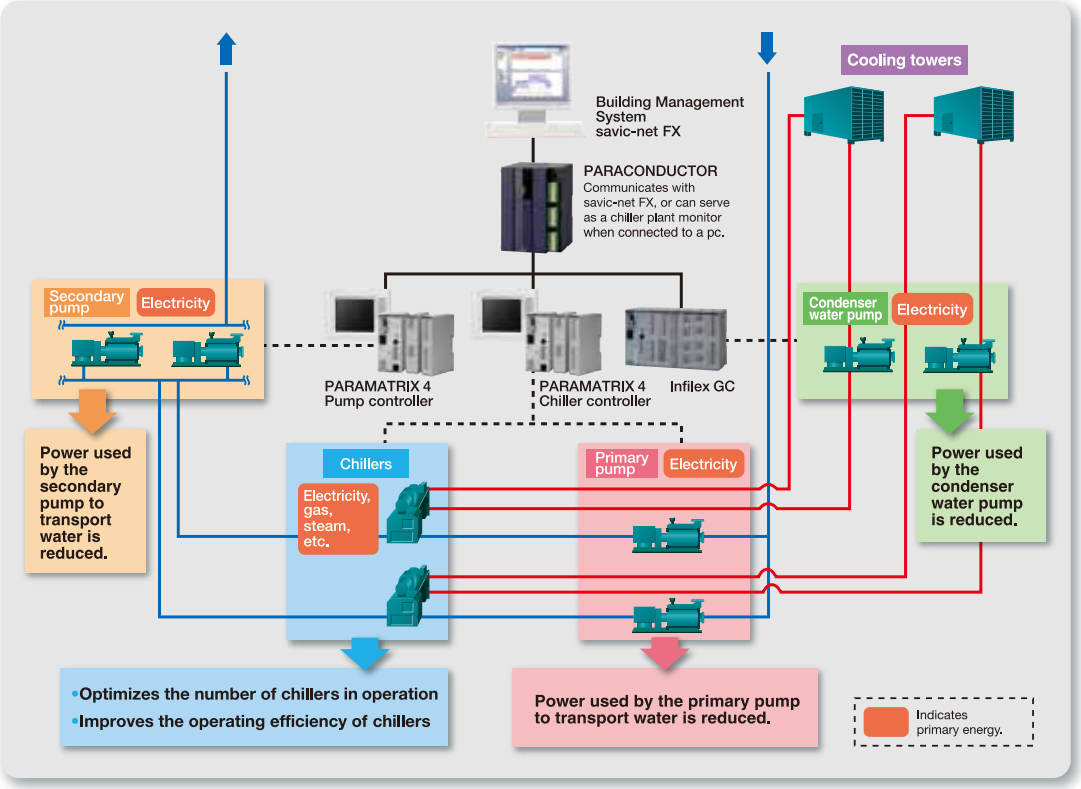

PARAMATRIX 4

Controls the number of operating chillers and handles pressure control. Capable of a variety of energy-saving control functions.

PARACONDUCTOR

Provides integrated management of connected chiller controllers. Makes the status of chillers, the amount of energy consumption, and the energy efficiency of control easy to grasp, and provides optimal control.

azbil
http://www.azbil.com/

Yamatake Corporation changed its name to Azbil Corporation on April 1, 2012.

Japan

• Azbil Corporation • Azbil Trading Co., Ltd.
• Azbil Yamatake Friendly Co., Ltd.
• Azbil Care & Support Co., Ltd. • Azbil SecurityFriday Co., Ltd.
• Azbil Kimmon Co., Ltd.
• Azbil Kyoto Co., Ltd. • Azbil TA Co., Ltd.
• Azbil Taishin Co., Ltd. • Tem-Tech Lab.

Overseas

• Azbil Korea Co., Ltd. • Azbil Taiwan Co., Ltd.
• Azbil Kimmon Technology Corporation
• Azbil Vietnam Co., Ltd. • Azbil India Pvt. Ltd.
• Azbil (Thailand) Co., Ltd. • Azbil Production (Thailand) Co., Ltd.
• Azbil Philippines Corporation • Azbil Malaysia Sdn. Bhd.
• Azbil Singapore Pte. Ltd. • PT. Azbil Berca Indonesia
• Azbil Saudi Arabia Limited
• Azbil Control Instruments (Dalian) Co., Ltd.
• Azbil Information Technology Center (Dalian) Co., Ltd.
• Yamatake Environmental Control Technology (Beijing) Co., Ltd.
• Beijing YTYH Intelli-Technology Co., Ltd.
• Azbil Control Solutions (Shanghai) Co., Ltd.
• Shanghai Azbil Automation Co., Ltd. • Azbil Hong Kong Limited
• Yamatake Automation Products (Shanghai) Co., Ltd.
• CECEP Building Energy Management Co., Ltd.
• Azbil North America, Inc. • Azbil VorTek, LLC • Azbil BioVigilant, Inc.
• Azbil Brazil Limited • Azbil Europe NV • Azbil Telstar, S.L.

〈Company/Branch office〉

azbil Group PR magazine, azbil 2013 Vol. 4, No. 3
Issued by Mikako Takahashi, Public Relations Section, Corporate Planning Department, Azbil Corporation
19F Tokyo Building, 2-7-3 Marunouchi, Chiyoda-ku, Tokyo 100-6419 Japan TEL: 81-3-6810-1006 FAX: 81-3-5220-7274 URL: http://www.azbil.com/

PRINTED WITH SOY INK

MIX Paper from responsible sources FSC® C002215 www.fsc.org

The azbil Group is forging ahead while respecting the natural environment.

PR-3001E-1310 (1310-4K-D)