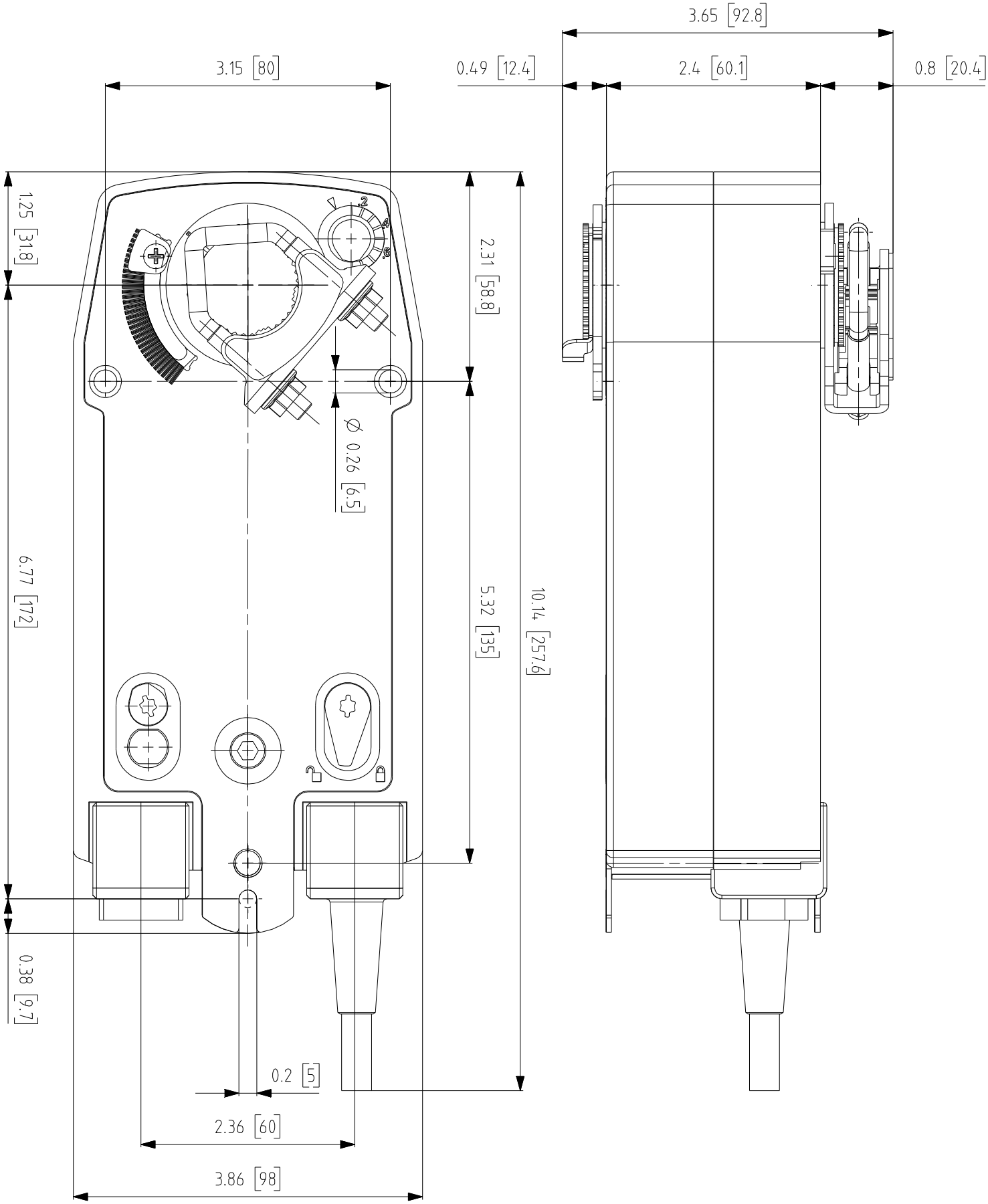
3.15 [80]
0.49 [12.4]
3.65 [92.8]
2.4 [60.1]
0.8 [20.4]
1.25 [31.8]
2.31 [58.8]
Ø 0.26 [6.5]
6.77 [172]
5.32 [135]
10.14 [257.6]
0.38 [9.7]
0.2 [5]
2.36 [60]
3.86 [98]