Top-Guided Single Seated Control Valves

Model HTS_ _ _

OVERVIEW

Model HTS Top-guided Single Seated Control Valves are designed for heavyduty service. The compact valve body, having a S-shape flow passage that features low pressure loss, allows a large flow capacity, rangeability, and high accuracy flow characteristics.
The valve plug is highly vibration-resistant as it is held by a top guide section which has a large sliding area. The flow shut-off performance complies with the IEC or JIS Standards. The actuator integrated with simplest mechanisms utilizes a compact yet powerful diaphragm actuator loaded with multiple springs.
The model HTS Valves are widely applicable for reliable control, with high shut-off performance, in high or low temperature, high pressure process lines
Model HTS is compliant to Functional Safety Standard (IEC61508).

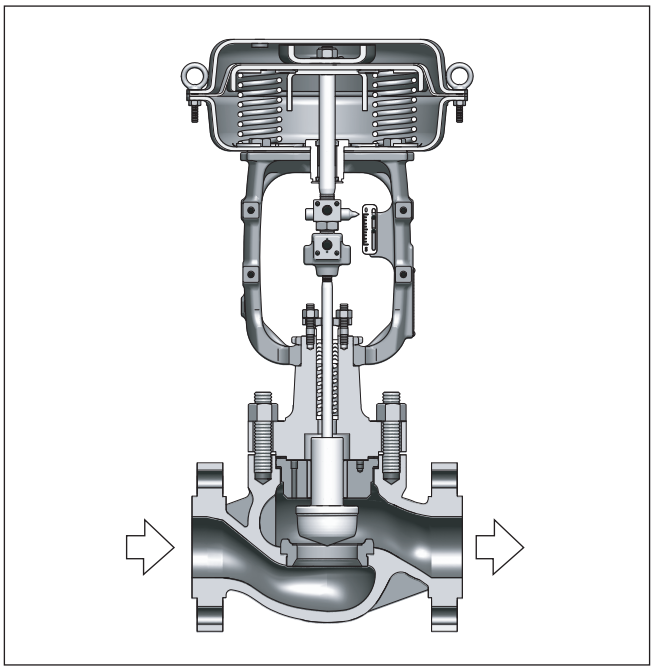

SPECIFICATIONS

Body

Type: Straight-through, cast globe valve
Nominal size: 1-1/2, 2, 2-1/2, 3, 4, 6, 8 inches

Pressure rating and End connection

Flanged end:	Pressure rating	Applicable standard
FF	JIS10K	JIS B2210-1984
	ANSI Class 125	ANSI B16.5-1981
	JPI Class 125	JPI-7S-15-1993
RF	JIS10K,16K,20K,30K,40K	JIS B2210-1984
	ANSI Class 150, 300, 600	ANSI B16.5-1981
	JPI Class150, 300, 600	JPI-7S-15-1993
RJ, LG	ANSI Class 150, 300, 600	ANSI B16.5-1981
	JPI Class 150, 300, 600	JPI-7S-15-1993
Tongue and groove(groove) Male and female(female)	JIS16K, 20K, 30K, 40K	JIS B2202-1984

- Welded end: SW: 1-1/2 to 2 inches
  BW: 2-1/2 to 8 inches

Material

For body/trim material combinations and operating temperature ranges, refer to Table 1.

Bonnet

Plain bonnet	–17 to +230 °C	—
Extention bonnet Type1	–45 to –17 °C 230 to 566 °C	—
Extention bonnet Type2	–100 to –45 °C	Integral-cast type
	–196 to –100 °C	Welded type
Bellows type	–50 to +350 °C	Formed or welded bellows (Detail is showing in Fig.3)

Note) Take care not to exceed the operating temperature ranges specified for respective materials.

Gland type: Bolted gland

Grease

- Grease not provided
  When V shaped PTFE packing or PTFE yarn packing is used
- Grease provided
  When graphite packing is used.

Note) PTFE: Polytetrafluoroethylene

Gasket

Type: Flat type, serrated type

Material

Stainless steel (SUS316, SUS316L, SUS329J1), copper, aluminum, titanium, ASTM B574 (Hastelloy C-276 equivalent), or Alloy 20

Note) The material conforms to the material of the trim.

Trim

Valve plug

Single-seated, Contoured-type plug

- High-capacity (for flow characteristics, refer to Figure 1.)
  - Metal seat: Equal percentage (%C), Linear (LC)
  - Soft seat: Equal percentage (%T), Linear (LT)
- High-flow characteristics
  - Metal seat (for flow characteristics, refer to Figure 2-1.)
    Equal percentage (%CF), Linear (LCF)
  - Soft seat (for flow characteristics, refer to Figure 2-2.)
    Equal percentage (%TF), Linear (LTF)
  - Single-seat quick-opening type plug
    Metal (CoCr-A) seat (QS)

  (When soft seat is required, use a contoured type soft seat.)

Note) For operating temperature and max. differential pressure range of soft seat, refer to Figure 4.

Material

For body/trim material combinations and operating temperature ranges, refer to Table 1.

Note) For fluid conditions requiring CoCr-A, refer to Figure 5.

Actuator

Type

Diaphragm	Actuator type
Single acting diaphragm actuator	PSA1_ , HA_ _ , VA5_
Spring type piston actuator	PSA6R, PSA7R
Double acting piston actuator	DAP_ _ _

Diaphragm

Actuator type	Material
PSA1_ HA_ _	Cloth embedded ethylene propylene rubber
VA5_	Cloth embedded chloroprene rubber

Spring range

Actuator type	Spring range
PSA1_, HA_ _, VA5_	20 to 98 kPa {0.2 to 1.0 kgf/cm²} 80 to 240 kPa {0.8to 2.4 kgf/cm²}
PSA6R	200 to 340 kPa {2.0 to 3.5 kgf/cm²} 200 to 390 kPa {2.0 to 4.0 kgf/cm²}
PSA7R	200 to 270 kPa {2.0 to 2.8 kgf/cm²} 200 to 305 kPa {2.0 to 3.0 kgf/cm²}

Supply pressure

Actuator type	Supply pressure
PSA1_, HA_ _	120 to 390 kPa {1.2 to 4.0 kgf/cm²}
VA5_	120 to 270 kPa {1.2 to 2.8 kgf/cm²}
PSA6R	400 to 500 kPa {4 to 5 kgf/cm²}
PSA7R	400kPa {4 kgf/cm²2}
DAP_ _ _	290 to 490 kPa {3 to 5 kgf/cm²}

Note) Allowable differential pressure varies depending on spring range and air supply pressure.

Air connection:

Actuator type	Connection
PSA1_, HA_ _, VA5_	Rc1/4 or 1/4NPT internal thread
PSA6R PSA7R	Rc1/4 or 1/4NPT internal thread Rc3/8 or 3/8NPT internal thread
DAP_ _ _	Rc1/2 internal thread

Ambient temperature:

-30 to 70°C

Valve action

Air-to-close (Direct action actuator is combined.)
Air-to-open (Reverse action actuator is combined.)

Optional accessories

Positioner*, pressure regulator with filter, hand wheel*,7 limit switch, solenoid valve, motion transmitter, booster relay, lock-up valve, and others.

Note) 1. For the optional items, refer to the specification sheets and installation drawings of respective accessories.

2. Accessories with the asterisk mark (*) are selected from among the following types depending on the actuators to be combined.

3) Vinyl-coated copper pipes are normally used for air piping. If the ambient temperature may be –15 °C or lower or +60 °C or higher, stainless steel pipes are recommended.

<table>
<tr><th rowspan="2">Actuator</th><th colspan="2">Positioner</th><th colspan="2">Hand wheel</th></tr>
<tr><th>P/P</th><th>I/P</th><th>Top</th><th>Side</th></tr>
<tr><td>PSA1</td><td>VPE _ _ - _</td><td rowspan="8">AVP2 _ _
AVP3 _ _
AVP7 _ _</td><td rowspan="3">Mounted</td><td rowspan="7">Mounted</td></tr>
<tr><td>HA2 - 4</td><td>HTP- _ _</td></tr>
<tr><td>VA5</td><td>HTP- _ _</td></tr>
<tr><td rowspan="2">PSA6</td><td>HTP- _ _</td><td rowspan="6">–</td></tr>
<tr><td>VPP _ _ - _</td></tr>
<tr><td>PSA7</td><td rowspan="3">VPP _ _ - _</td></tr>
<tr><td>DAP560
DAP1000
DAP1500</td><td>Mounted
(Hydraulic)</td></tr>
</table>

Additional specification (by special order)

- Special inspection
  Flow characteristics inspection, material inspection (Material certificate), nondestructive inspection, steam inspection, low-temperature inspection.
- With drain plug
- Double gland
- Oil/water free treatment
- York material SCPH2 (York material of PSA1, 6, 7 is SCPH2 as standard.)
- Copper free treatment
- Stainless steel (SUS304) Atmosphere-exposed nuts and bolts
- Special air piping and joint
- Sand-/dust-preventive measures
- Saline damage countermeasures
- Tropical-area use specifications
- Cold-area use specifications
- Vacuum service

Performance

Rated Cv value

Refer to Table 3, Table 4 and Table 5.

Flow characteristics

Refer to Figure 1, Figure 2-1 and Figure 2-2.

Inherent rangeability

- 50 : 1
- Optional; 75 : 1

Allowable differential pressure

Refer to Table 10 to Table 23.

Leakage specification

- Contoured type plug
  IEC 60534-4:2006 or JIS B 2005-4:2008
  <Metal seat>
  Standard.....Class IV: Leakage less than 0.01% of maximum valve capacity.
  Option.....Leakage less than 0.001% of maximum valve capacity.
  <Soft seat>
  Class VI: Leakage less than 0.00001% of maximum valve capacity.
- Quick-opening type plug
  <Metal (CoCr-A) seat>
  Leakage less than 0.00001% of maximum valve capacity.

Hysteresis error

Actuator type	PSA1_	HA_ _ VA5_ DAP_ _ _	PSA6R PSA7R
Without positioner	±5% F.S	±3% F.S	±9% F.S
With positioner	±1% F.S	±1% F.S	±2% F.S

Linearity

Actuator type	PSA1_	HA_ _ VA5_ DAP_ _ _	PSA6R PSA7R
Without positioner	±5% F.S	±5% F.S	±9% F.S
With positioner	VPE_ _ : ±3% F.S. AVP_ _ _ : ±2% F.S.	±1% F.S	±2% F.S

Note) When positioner is not provided, operating performance may vary depending on type of packings used.

Dimensions

Refer to Figure 8 , Table 24 and Table 25.

Weight

Refer to Table 26.

Actuator orientation

Refer to Figure 9.

Finish

Blue or silver, or other specified colors.

Table 1. Body / trim material combinations and operating temperature ranges (°C)

Trim material \ Body material		JIS	SCPH2	SCPH21	SCPH61	SCPL1	SCS11	SCS13A	SCS14A	SCS16A	SCS19A
		ASTM	A216WCB	A217WC6	A217C5	A352LCB		A351CF8	A351CF8M	A351CF3M	A351F3
JIS	SUS316 or SCS14A		-5 to +300	——	——	-45 to +300	——	-196 to +300	-196 to +300	——	——
JIS	SUS316L or SCS16A		-5 to +300	——	——	-45 to +300	——	-196 to +300	-196 to +300	-196 to 300	-196 to +300
JIS	SUS440C		-5 to +425	-5 to +425	-5 to +425	——	——	——	——	——	——
JIS	SUS329J1 or SCS11		——	——	——	——	-50 to +300	——	-196 to +300	——	——
JIS	SUS316 CoCr-A seat or SCS14A CoCr-A seat		-5 to +425	-5 to +550	-5 to +566	-45 to +350	——	-196 to +550	-196 to +550	——	——
JIS	SUS316 CoCr-A face or SCS14A CoCr-A face		-5 to +425	-5 to +550	-5 to +566	-45 to +350	——	-196 to +550	-196 to +550	——	——
JIS	SUS316L CoCr-A Seat or SCS16A CoCr-A Seat		——	——	——	-45 to +350	——	-196 to +450	-196 to +450	-196 to +450	-196 to +450
JIS	SUS329J1 CoCr-A Seat or SCS11 CoCr-A Seat		——	——	——	——	-50 to +550	——	-196 to +550	——	——
JIS	SUS316 Soft seat or SCS14A Soft seat		-5 to +230	——	——	-45 to +230	——	-80 to +230	-80 to +230	——	——
JIS	SUS316L Soft seat or SCS16A Soft seat		——	——	——	-45 to +230	——	-80 to +230	-80 to +230	-80 to +230	-80 to +230
JIS	SUS329J1 Soft seat or SCS11		——	——	——	——	-50 to +230	——	-80 to +230	——	——

Table 2. Body / trim material combinations and operating temperature ranges (°C)

Trim material \ Body material		JIS	SCPH2	SCS31A	SCS14A	SCS16A	SCS19A	Titanium	ASTM B574 *	Alloy 20
		ASTM	A216WCB	A351CF8	A351CF8M	A351CF3M	A351CF3			
JIS	Titanium alloy		——	——	——	——	——	-196 to +315	——	——
JIS	Titanium		——	——	——	——	——	-196 to +315	——	——
JIS	ASTM B574 *		——	——	——	——	——	——	-196 to +450	——
JIS	Alloy 20		——	——	——	——	——	——	——	-196 to +300
JIS	Monel		-5 to +300	-196 to +300	-196 to +300	-196 to +300	-196 to +300	——	——	——

Note) 1. ASTM Specifications indicate materials equivalent to those designated by JIS
*2. *: ASTM B574 is equivalent to Hastelloy C-276.*

Cv value and travel

Table 3. High capacity type contoured plug

Nominal size (inches)		1-1/2	2	2-1/2	3	4	6	8
Port size (inches)		1-1/2	2	2-1/2	3	4	6	8
Rated Cv value	(%C,LC,%T,LT)	30	50	85	125	200	420	700
Rated travel (mm)		25		38			50	75

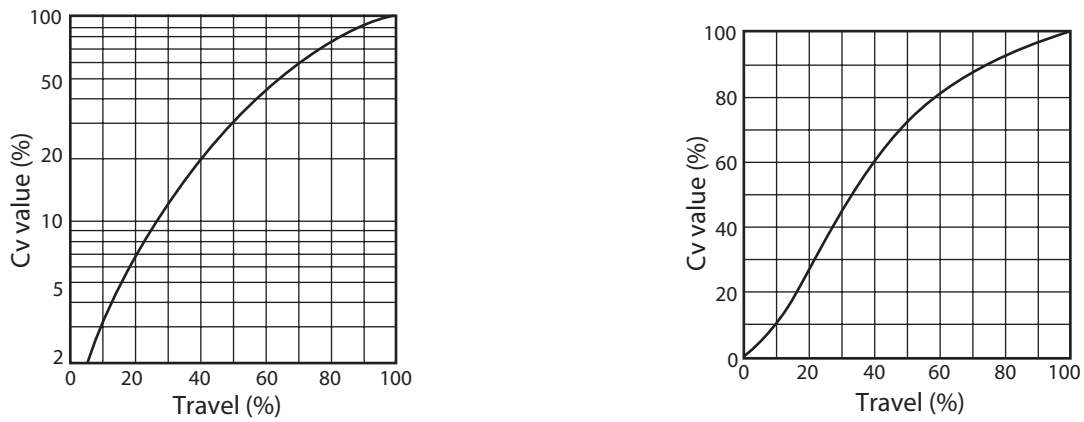

a. Equal percentage characteristics (%C: Metal seat, %T: Soft seat) b. Linear characteristics (LC: Metal seat, LT: Soft seat)

Figure 1. Flow characteristics: High-capacity type

Table 4. High-flow characteristic type contoured plug

Nominal size (inches)	1-1/2						2							2-1/2			3			4			6			8		
Port size (inches)				1	1-1/4	1-1/2				1	1-1/4	1-1/2	2	1-1/2	2	2-1/2	2	2-1/2	3	2-1/2	3	4	4	5	6	5	6	8
Rated Cv value (%CF, LCF, %TF, LTF)	2.5	4	6.3	10	17	24	2.5	4	6.3	10	17	24	44	24	44	68	44	68	99	68	99	175	175	275	360	275	360	640
Rated travel (mm)	14.3			25			14.3			25				38									50			75		

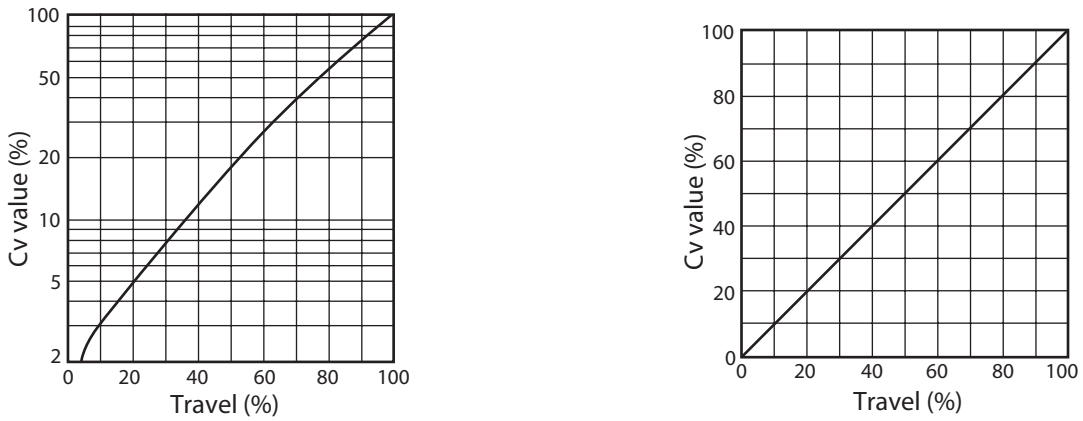

a. Equal percentage characteristics (%CF: Metal seat) b. Linear characteristics (LCF: Metal seat)

Figure 2-1 Flow characteristics: High-flow characteristic type (%CF, LCF)

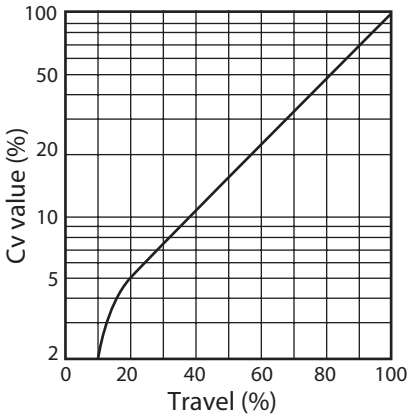

a. Equal percentage characteristics (%TF: Soft seat)

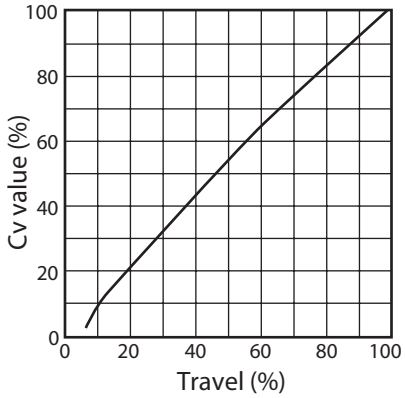

b. Linear characteristics (LTF: Soft seat)

Figure 2-2 Flow characteristics: High-flow characteristic type (%TF, LTF)

Note) The above graphs indicate typical flow characteristic

Table 5. Quick-opening type plug

Normal size (inches)		1-1/2	2	2-1/2	3	4	6	8
Port size (inches)		1-1/2	2	2-1/2	3	4	6	8
Rated Cv value	(QS)	35	55	95	135	220	460	720
Rated travel (mm)		10	13	19	19	25	30	50

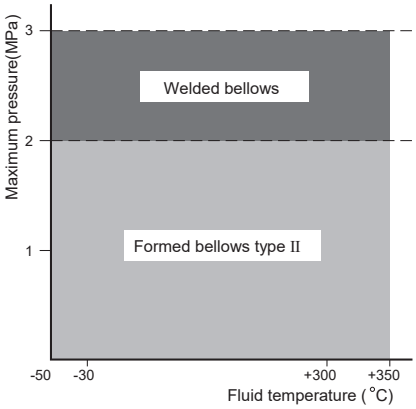

Figure 3. Bellows Type by Temperature and Pressure Ranges

Note) Bellows type are classified into Formed bellows type II and welded bellows by temperature and pressure ranges. Please refer to No. SS2-BSL100-0100 about detail of bellows specification.

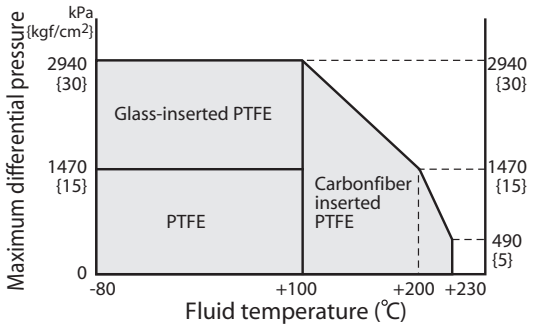

Figure 4. Temperature and maximum differential pressure range of soft-seat type

Note) If there is any possibility to cause errosion due to saturated steam or superheated-water, use the metal seat.

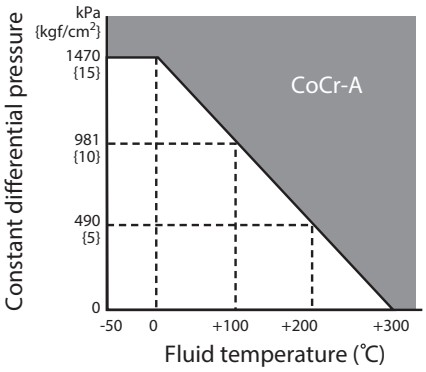

Figure 5. Temperature/normal differential pressure ranges requiring CoCr-A

Note) When cavitation/flushing service, oil prohibitive service, or retention of valve-close performance is required, use of CoCr-A is recommended regardless of temperature or differential pressure.

Table 6. Gland packing

According to your application, select appropriate type of gland packing from the following:

Application	Packing Type	Fluid temperature range / Maximum working pressure
General use (Various chemical, acid and alkali)	PTFE fiber yarn packing with carbon fiber core packing [P4519]	-17 to +230 °C
		10MPa Max.
General use or oil free (Various chemical, acid and alkali)	V shaped pure PTFE packing [Pure PTFE]	-196 to + 230 °C
		10MPa Max.
Vacuum and General use or oil free (Various chemical, acid and alkali)	V shaped pure PTFE packing (Dir. + Rev.) [Pure PTFE (Dir. + Rev.)]	-196 to +230 °C
		10MPa Max.
Low or standard temperature (Various chemical, acid and alkali, LNG, etc.)	V shaped pure PTFE packing + PTFE fiber yarn packing or PTFE braided packing [Pure PTFE +PTFE fiber]	-196 to +230 °C
		10MPa Max.
High temperature	Expanded graphite packing + Expanded graphite yarn packing *1 [P6610CH+P6528]	+230 to +500 °C
		43MPa Max.
	Expanded graphite packing + Carbon fiber reinforced expanded graphite packing *1 [P6610CH+M8590]	+500 to +566 °C
		43MPa MAX.
Measures against VOC *2 exhaust regulation [ISO15848-1 compliant low emission packing system]	Packing with Live Load structure *3	-17 to +350 °C
		15.5 MPa Max.

*1. *Grease provided*
It cannot be applied to PSA1 actuator (spring range 20 to 98 kPa).

*2. *Volatile Organic Compound*

*3. *Refer to special spec sheet No.SS2-SSL100-0100 about detail of Low emission gland packing.*

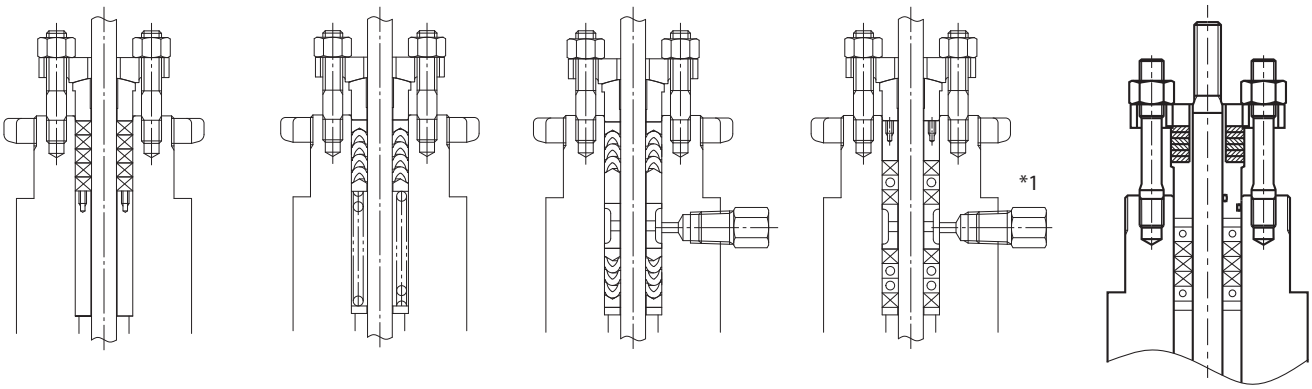

For general use [P4519]

For general use or oil free [V shaped pure PTFE]

For vacuum and general use or oil free [V shaped pure PTFE (Dir.＋Rev.)]

For high temperature [P6610CH+P6528]
*1 Grease provided by lubricator

Measures against VOC exhaust regulation [Packing with Live Load structure]

Figure 6. Gland Packing structure

Trim construction and materials

Major material combinations of body and trim parts are shown here. Consult azbil sales representatives for the materials other than shown here.

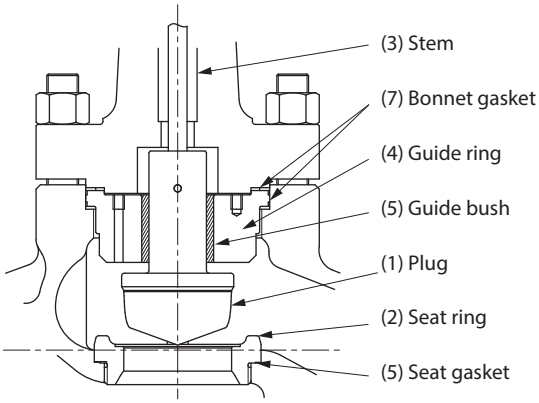

Figure 7-1 Trim construction (w/ guide bush)

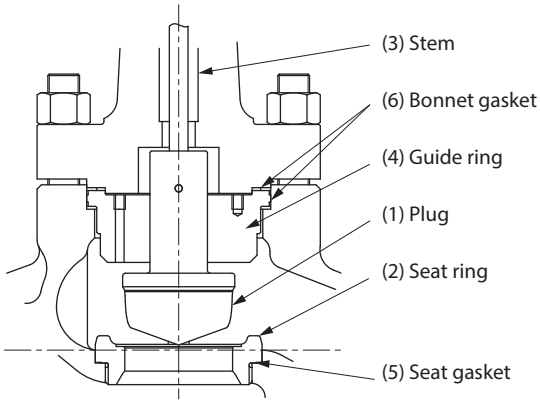

Figure 7-2 Trim construction (w/o guide bush)

Table 7. Body material carbon steel (SCPH2/A216WCB)

(1) Plug (2) Seat ring	SUS316 or SCS14A	SUS440C	SUS316 CoCr-A seat or SCS14A CoCr-A seat SUS316 CoCr-A face or SCS14A CoCr-A face		SUS316 Soft seat or SCS14A Soft seat	
			General	Oil free	General	Oil free
(3) Stem	SUS316					
(4) Guide ring	S25C or SFVC2A		S25C CoCr-A or SFVC2A CoCr-A		S25C or SFVC2A	S25C CoCr-A or SFVC2A CoCr-A
(5) Guide bush	SUS440C		No		SUS440C	No
(6) Seat gasket	No (D.T. -17 to +230 °C)			SUS316 (PTFE coated)	No	SUS316 (PTFE coated)
	SUS316 (D.T. > +230 °C)					
(7) Bonnet gasket	SUS316			SUS316 (PTFE coated)	SUS316	SUS316 (PTFE coated)

D.T. : Design Temperature

Table 8. Body material stainless steel (SCS13A/A351CF8)

(1) Plug (2) Seat ring	SUS316 or SCS14A	SUS316 CoCr-A seat or SCS14A CoCr-A seat SUS316 CoCr-A face or SCS14A CoCr-A face		SUS316 Soft seat or SCS14A Soft seat	
	General	General	Oil free	General	Oil free
(3) Stem	SUS316				
(4) Guide ring	SUS304	SUS304 CoCr-A		SUS304	SUS304 CoCr-A
(6) Seat gasket	No (D.T. -17 to +230 °C)		SUS316 (PTFE coated)	No (D.T. -17 to +230 °C)	SUS316 (PTFE coated)
	SUS316 (D.T. < -17 °C and D.T. >230 °C)			SUS316 (D.T. < -17 °C)	
(7) Bonnet gasket	SUS316		SUS316 (PTFE coated)	SUS316	SUS316 (PTFE coated)

D.T. : Design Temperature

Table 9. Body material stainless steel (SCS14A/A351CF8M)

<table>
<tr><td rowspan="2">(1) Plug
(2) Seat ring</td><td rowspan="2">SUS316 or SCS14A</td><td colspan="2">SUS316 CoCr-A seat or SCS14A CoCr-A seat
SUS316 CoCr-A face or SCS14A CoCr-A face</td><td colspan="2">SUS316 Soft seat or SCS14A Soft seat</td></tr>
<tr><td>General</td><td>Oil free</td><td>General</td><td>Oil free</td></tr>
<tr><td>(3) Stem</td><td colspan="5">SUS316</td></tr>
<tr><td>(4) Guide ring</td><td>SUS316</td><td colspan="2">SUS316 CoCr-A</td><td>SUS316</td><td>SUS316 CoCr-A</td></tr>
<tr><td rowspan="2">(6) Seat gasket</td><td colspan="2">No
(D.T. -17 to +230 °C)</td><td rowspan="2">SUS316 (PTFE coated)</td><td>No
(D.T. -17 to +230 °C)</td><td rowspan="2">SUS316 (PTFE coated)</td></tr>
<tr><td colspan="2">SUS316
(D.T. < -17 °C and D.T. >230 °C)</td><td>SUS316
(D.T. < -17 °C)</td></tr>
<tr><td>(7) Bonnet gasket</td><td colspan="2">SUS316</td><td>SUS316 (PTFE coated)</td><td>SUS316</td><td>SUS316 (PTFE coated)</td></tr>
</table>

D.T. : Design Temperature

Allowable differential pressure

Contoured-type metal seat (%CF, LCF, %C, LC) : PTFE packing
Valves with type PSA, HA or VA actuator

Table 10. Air-to-close

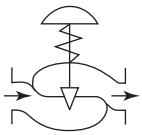

Actuator model no.	Supply pressure kPa {kgf/cm²}	Spring range kPa {kgf/cm²}	Differential pressure (kPa {kgf/cm²})												
			Cv value			Port size (inches)									
			2.5	4.0	6.3	1	1-1/4	1-1/2	2	2-1/2	3	4	5	6	8
PSA1D	140 {1.4}	20 to 98 {0.2 to 1.0}	981 {10.0}	981 {10.0}	550 {5.6}	320 {3.3}	200 {2.0}	140 {1.4}	80 {0.8}	—	—	—	—	—	—
	160 {1.6}	20 to 98 {0.2 to 1.0}	3920 {40.0} 5100 {52.0}	3920 {40.0} 5100 {52.0}	2740 {28.0}	1570 {16.0}	970 {9.9}	700 {7.1}	400 {4.1}	—	—	—	—	—	—
	390 {4.0}	80 to 240 {0.8 to 2.4}	3920 {40.0} 9810 {100}	3920 {40.0} 9810 {100}	3920 {40.0} 8240 {84.0}	3920 {40.0} 4710 {48.0}	2840 {29.0}	2060 {21.0}	1180 {12.0}	—	—	—	—	—	—
HA2D	140 {1.4}	20 to 98 {0.2 to 1.0}	1960 {20.0}	1960 {20.0}	1070 {10.9}	620 {6.3}	370 {3.8}	260 {2.7}	160 {1.6}	98 {1.0}	70 {0.7}	50 {0.5}	—	—	—
	160 {1.6}	20 to 98 {0.2 to 1.0}	3920 {40.0} 9810 {100}	3920 {40.0} 9810 {100}	3920 {40.0} 5300 {54.0}	3100 {31.6}	1890 {19.3}	1340 {13.7}	760 {7.8}	500 {5.1}	340 {3.5}	200 {2.0}	—	—	—
	390 {4.0}	80 to 240 {0.8 to 2.4}	—	—	3920 {40.0} 9810 {100}	3920 {40.0} 9220 {94.0}	3920 {40.0} 5590 {57.0}	3920 {40.0} 4020 {41.0}	2310 {21.7}	1460 {14.9}	1030 {10.5}	580 {5.9}	—	—	—
HA3D	140 {1.4}	20 to 98 {0.2 to 1.0}	—	—	—	1100 {11.2}	670 {6.8}	470 {4.8}	270 {2.8}	170 {1.7}	120 {1.2}	70 {0.7}	40 {0.4}	30 {0.3}	—
	160 {1.6}	20 to 98 {0.2 to 1.0}	—	—	—	3920 {40.0} 5490 {56.0}	3350 {34.2}	2370 {24.2}	1370 {14.0}	860 {8.8}	610 {6.2}	340 {3.5}	220 {2.2}	140 {1.4}	—
	390 {4.0}	80 to 240 {0.8 to 2.4}	—	—	—	3920 {40.0} 9810 {100}	3920 {40.0} 9810 {100}	3920 {40.0} 7060 {72.0}	3920 {40.0} 4120 {42.0}	2600 {26.5}	1830 {18.7}	1030 {10.5}	660 {6.7}	400 {4.1}	—
HA4D	140 {1.4}	20 to 98 {0.2 to 1.0}	—	—	—	1880 {19.2}	1160 {11.8}	810 {8.3}	470 {4.8}	290 {3.0}	220 {2.2}	120 {1.2}	70 {0.7}	50 {0.5}	30 {0.3}
	160 {1.6}	20 to 98 {0.2 to 1.0}	—	—	—	3920 {40.0} 9250 {94.3}	3920 {40.0} 5670 {57.8}	3920 {40.0}	2370 [24.2}	1490 {15.2}	1050 {10.7}	600 {6.1}	380 {3.9}	240 {2.4}	150 {1.5}
	390 {4.0}	80 to 240 {0.8 to 2.4}	—	—	—	3920 {40.0} 9810 {100}	3920 {40.0} 9810 {100}	3920 {40.0} 9810 {100}	3920 {40.0} 7060 {72.0}	3920 {40.0} 4410 {45.0}	3160 {32.2}	1780 {18.2}	1140 {11.6}	700 {7.1}	430 {4.4}
VA5D	140 {1.4}	20 to 98 {0.2 to 1.0}	—	—	—	—	—	1070 {10.9}	620 {6.3}	410 {4.2}	280 {2.9}	160 {1.6}	110 {1.1}	60 {0.6}	40 {0.4}
	160 {1.6}	20 to 98 {0.2 to 1.0}	—	—	—	—	—	3920 {40.0} 5430 {55.4}	3130 {31.9}	2040 {20.8}	1440 {14.7}	810 {8.3}	520 {5.3}	310 {3.2}	200 {2.0}

Note) 1. Take care not to cause the maximum allowable differential pressure to exceed the maximum operating pressure designated by ANSI B 16. 34-1981 or JIS B2201-1984.

2. The upper figures denote the operating allowable differential pressure. The lower denote allowable differential pressure at full closure.

Allowable differential pressure

Contoured-type metal seat (%CF, LCF, %C, LC) : PTFE packing
Valves with type PSA, HA or VA actuator

Table 11. Air-to-open

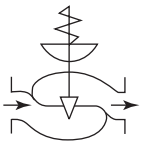

Actuator model No.	Supply pressure kPa {kgf/cm²}	Spring range kPa {kgf/cm²}	Differential pressure (kPa {kgf/cm²})												
			Cv value			Port size (inches)									
			2.5	4.0	6.3	1	1-1/4	1-1/2	2	2-1/2	3	4	5	6	8
PSA1R	140 {1.4}	20 to 98 {0.2 to 1.0}	981 {10.0}	981 {10.0}	550 {5.6}	320 {3.3}	200 {2.0}	140 {1.4}	80 {0.8}	—	—	—	—	—	—
	270 {2.8}	80 to 240 {0.8 to 2.4}	3920 {40.0} / 5100 {52.0}	3920 {40.0} / 5100 {52.0}	3820 {39.0}	2160 {22.0}	1270 {13.0}	970 {9.9}	560 {5.7}	—	—	—	—	—	—
HA2R	140 {1.4}	20 to 98 {0.2 to 1.0}	1960 {20.0}	1960 {20.0}	1070 {10.9}	620 {6.3}	370 {3.8}	260 {2.7}	160 {1.6}	98 {1.0}	70 {0.7}	50 {0.5}	—	—	—
	270 {2.8}	80 to 240 {0.8 to 2.4}	3920 {40.0} / 9810 {100}	3920 {40.0} / 9810 {100}	3920 {40.0} / 7450 {75.9}	3920 {40.0} / 4310 {44.0}	2650 {27.0}	1870 {19.1}	1090 {11.1}	680 {6.9}	480 {4.9}	270 {2.8}	—	—	—
HA3R	140 {1.4}	20 to 98 {0.2 to 1.0}	—	—	—	1100 {11.2}	670 {6.8}	470 {4.8}	270 {2.8}	170 {1.7}	120 {1.2}	70 {0.7}	40 {0.4}	30 {0.3}	—
	270 {2.8}	80 to 240 {0.8 to 2.4}	—	—	—	3920 {40.0} / 7650 {78.0}	3920 {40.0} / 4610 {47.0}	3330 {34.0}	1920 {19.6}	1210 {12.3}	850 {8.7}	480 {4.9}	300 {3.1}	190 {1.9}	—
HA4R	140 {1.4}	20 to 98 {0.2 to 1.0}	—	—	—	1830 {18.7}	1130 {11.5}	820 {8.4}	470 {4.8}	290 {3.0}	220 {2.2}	120 {1.2}	70 {0.7}	50 {0.5}	30 {0.3}
	270 {2.8}	80 to 240 {0.8 to 2.4}	—	—	—	3920 {40.0} / 9810 {100}	3920 {40.0} / 7860 {80.2}	3920 {40.0} / 5690 {58.0}	3090 {31.5}	2090 {21.3}	1470 {15.0}	830 {8.5}	530 {5.4}	320 {3.3}	200 {2.1}
VA5R	140 {1.4}	20 to 98 {0.2 to 1.0}	—	—	—	—	—	1080 {11.0}	610 {6.2}	410 {4.2}	280 {2.9}	170 {1.7}	110 {1.1}	60 {0.6}	40 {0.4}
	270 {2.8}	80 to 240 {0.8 to 2.4}	—	—	—	—	—	3920 {40.0} / 7630 {77.8}	3920 {40.0} / 4390 {44.8}	2860 {29.2}	2020 {20.6}	1140 {11.6}	720 {7.4}	440 {4.5}	270 {2.8}
PSA6R	400 {4.0} *1	200 to 340 {2.0 to 3.5}	—	—	—	—	—	3920 {40.0} / 9810 {100}	3920 {40.0} / 9510 {97.0}	3920 {40.0} / 5980 {61.0}	3920 {40.0} / 4220 {43.0}	2370 {24.2}	—	—	—
	500 {5.0} *2	200 to 390 {2.0 to 4.0}	—	—	—	—	—	—	—	—	—	2370 {24.2}	1520 {15.5}	930 {9.5}	—
	400 {4.0} *3	200 to 340 {2.0 to 3.5}	—	—	—	—	—	—	—	—	—	—	1520 {15.5}	930 {9.5}	630 {6.4}
PSA7R	400 {4.0} *2	200 to 270 {2.0 to 2.8}	—	—	—	—	—	—	—	—	—	4650 {47.4}	2970 {30.2}	1810 {18.4}	—
	400 {4.0} *3	200 to 305 {2.0 to 3.0}	—	—	—	—	—	—	—	—	—	—	2970 {30.2}	1810 {18.4}	1120 {11.4}

Note) *1. Take care not to cause the maximum allowable differential pressure to exceed the maximum operating pressure designated by ANSI B 16. 34-1981 or JIS B2201-1984.*

2. The upper figures denote the operating allowable differential pressure. The lower denote allowable differential pressure at full closure.

*3. *1…Applicable to valve sizes of 2-1/2 to 4 inches, *2…Applicable to valve size of 6 inches, *3…Applicable to valve size 8 inches.*

Allowable differential pressure

Contoured-type metal seat (%CF, LCF, %C, LC) : PTFE packing
Valves with type DAP actuator

Table 12. Air-to-close and Air-to-open

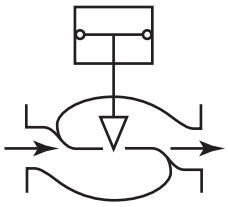

Actuator model No.	Supply pressure kPa {kgf/cm²}	Differential pressure (by port size (inches)) kPa {kgf/cm²}							
		1-1/2	2	2-1/2	3	4	5	6	8
DAP560	290 {3.0}	3920 {40.0}	3920 {40.0}	3920 {40.0}	3610 {36.8}	2030 {20.7}	1290 {13.2}	780 {8.0}	—
		9810 {100.0}	8130 {82.9}	5100 {52.0}					
	390 {4.0}	3920 {40.0}	3920 {40.0}	3920 {40.0}	3920 {40.0}	2730 {27.8}	1740 {17.8}	1060 {10.8}	—
		9810 {100.0}	9810 {100.0}	6860 {70.0}	4800 {49.0}				
	490 {5.0}	3920 {40.0}	3920 {40.0}	3920 {40.0}	3920 {40.0}	3420 {34.9}	2200 {22.4}	1330 {13.6}	—
		9810 {100.0}	9810 {100.0}	8630 {88.0}	6080 {62.0}				
DAP1000	290 {3.0}	—	—	3920 {40.0}	3920 {40.0}	3620 {36.9}	2310 {23.6}	1410 {14.4}	830 {8.5}
				9120 {93.0}	6370 {65.0}				
	390 {4.0}	—	—	3920 {40.0}	3920 {40.0}	3920 {40.0}	3120 {31.8}	1890 {19.3}	1120 {11.4}
				9810 {100.0}	8630 {88.0}	4800 {49.0}			
	490 {5.0}	—	—	3920 {40.0}	3920 {40.0}	3920 {40.0}	3920 {40.0}	2380 {24.3}	1410 {14.4}
				9810 {100.0}	9810 {100.0}	6080 {62.0}			
DAP1500	290 {3.0}	—	—	—	—	3920 {40.0}	3480 {35.5}	2120 {21.6}	1270 {13.0}
						5210 {53.1}			
	390 {4.0}	—	—	—	—	3920 {40.0}	3920 {40.0}	2840 {29.0}	1720 {17.5}
						6970 {71.1}	4610 {47.0}		
	490 {5.0}	—	—	—	—	3920 {40.0}	3920 {40.0}	3570 {36.4}	2160 {22.0}
						8790 {89.6}	5880 {60.0}		

Note) 1. *When a backup system for pressure drop at the air source is used, select the allowable differential pressure from whichever is lower-constant supplied air pressure or backup system set pressure (trip pressure).*

2. *Take care not to cause the maximum allowable differential pressure to exceed the maximum operating pressure designated by ANSI B 16. 34-1981 or JIS B2201-1984.*

3. *The upper figures denote the operating allowable differential pressure. The lower denote allowable differential pressure at full closure.*

Allowable differential pressure

Contoured type soft seat (%TF, LTF, %T,LT) : PTFE packing
Valves with type PSA, HA or VA actuator

Table 13. Air-to-close

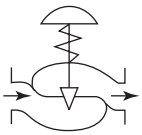

Actuator model No.	Supply pressure kPa {kgf/cm²}	Spring range kPa {kgf/cm²}	Differential pressure (kPa {kgf/cm²})												
			Cv value			Port size (inches)									
			2.5	4.0	6.3	1	1-1/4	1-1/2	2	2-1/2	3	4	5	6	8
PSA1D	140 {1.4}	20 to 98 {0.2 to 1.0}	710 {7.2}	710 {7.2}	390 {4.0}	220 {2.3}	140 {1.4}	98 {1.0}	60 {0.6}	—	—	—	—	—	—
	160 {1.6}	20 to 98 {0.2 to 1.0}	2940 {30.0}	2940 {30.0}	1860 {19.0}	1080 {11.0}	690 {7.0}	480 {4.9}	280 {2.9}	—	—	—	—	—	—
	390 {4.0}	80 to 240 {0.8 to 2.4}	—	—	2940 {30.0}	2940 {30.0}	1960 {20.0}	1370 {14.0}	840 {8.6}	—	—	—	—	—	—
HA2D	140 {1.4}	20 to 98 {0.2 to 1.0}	1370 {14.0}	1370 {14.0}	740 {7.6}	430 {4.4}	260 {2.7}	190 {1.9}	110 {1.1}	70 {0.7}	50 {0.5}	30 {0.3}	—	—	—
	160 {1.6}	20 to 98 {0.2 to 1.0}	2940 {30.0}	2940 {30.0}	2940 {30.0}	2160 {22.0}	1320 {13.5}	940 {9.6}	540 {5.5}	350 {3.6}	240 {2.5}	140 {1.4}	—	—	—
	390 {4.0}	80 to 240 {0.8 to 2.4}	—	—	2940 {30.0}	2940 {30.0}	2940 {30.0}	2740 {28.0}	1470 {15.0}	1020 {10.4}	720 {7.4}	400 {4.1}	—	—	—
HA3D	140 {1.4}	20 to 98 {0.2 to 1.0}	—	—	—	760 {7.8}	470 {4.8}	330 {3.4}	200 {2.0}	120 {1.2}	80 {0.8}	50 {0.5}	30 {0.3}	20 {0.2}	—
	160 {1.6}	20 to 98 {0.2 to 1.0}	—	—	—	2940 {30.0}	2350 {24.0}	1670 {17.0}	960 {9.8}	610 {6.2}	420 {4.3}	240 {2.5}	150 {1.5}	90 {0.9}	—
	390 {4.0}	20 to 98 {0.2 to 1.0}	—	—	—	2940 {30.0}	2940 {30.0}	2940 {30.0}	2740 {28.0}	1760 {18.0}	1270 {13.0}	720 {7.4}	460 {4.7}	280 {2.9}	—
HA4D	140 {1.4}	20 to 98 {0.2 to 1.0}	—	—	—	—	—	570 {5.8}	330 {3.4}	200 {2.1}	150 {1.5}	80 {0.8}	50 {0.5}	30 {0.3}	20 {0.2}
	160 {1.6}	20 to 98 {0.2 to 1.0}	—	—	—	—	—	2740 {28.0}	1670 {17.0}	1040 {10.6}	740 {7.5}	420 {4.3}	260 {2.7}	170 {1.7}	98 {1.0}
	390 {4.0}	80 to 240 {0.8 to 2.4}	—	—	—	—	—	2940 {30.0}	2940 {30.0}	2940 {30.0}	2160 {22.0}	1240 {12.7}	790 {8.1}	490 {5.0}	300 {3.1}
VA5D	140 {1.4}	20 to 98 {0.2 to 1.0}	—	—	—	—	—	—	—	280 {2.9}	200 {2.0}	110 {1.1}	80 {0.8}	40 {0.4}	30 {0.3}
	160 {1.6}	20 to 98 {0.2 to 1.0}	—	—	—	—	—	—	—	1430 {14.6}	1010 {10.3}	570 {5.8}	360 {3.7}	220 {2.2}	140 {1.4}

Note) 1. Take care not to cause the maximum allowable differential pressure to exceed the maximum operating pressure designated by ANSI B 16. 34-1981 or JIS B2201-1984.

Allowable differential pressure

Contoured type soft seat (%TF, LTF, %T,LT) : PTFE packing
Valves with type PSA, HA or VA actuator

Table 14. Air-to-open

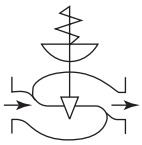

Actuator model No.	Supply pressure kPa {kgf/cm²}	Spring range kPa {kgf/cm²}	Differential pressure (kPa {kgf/cm²})												
			Cv value			Port size (inches)									
			2.5	4.0	6.3	1	1-1/4	1-1/2	2	2-1/2	3	4	5	6	8
PSA1R	140 {1.4}	20 to 98 {0.2 to 1.0}	710 {7.2}	710 {7.2}	390 {4.0}	220 {2.3}	140 {1.4}	98 {1.0}	60 {0.6}	—	—	—	—	—	—
	270 {2.8}	80 to 240 {0.8 to 2.4}	2940 {30.0}	2940 {30.0}	2650 {27.0}	1570 {16.0}	950 {9.7}	680 {6.9}	390 {4.0}	—	—	—	—	—	—
HA2R	140 {1.4}	20 to 98 {0.2 to 1.0}	1370 {14.0}	1370 {14.0}	740 {7.6}	430 {4.4}	260 {2.7}	190 {1.9}	110 {1.1}	70 {0.7}	50 {0.5}	30 {0.3}	—	—	—
	270 {2.8}	80 to 240 {0.8 to 2.4}	2940 {30.0}	2940 {30.0}	2940 {30.0}	2940 {30.0}	1860 {19.0}	970 {9.9}	760 {7.8}	470 {4.8}	330 {3.4}	200 {2.0}	—	—	—
HA3R	140 {1.4}	20 to 98 {0.2 to 1.0}	—	—	—	760 {7.8}	470 {4.8}	330 {3.4}	200 {2.0}	120 {1.2}	80 {0.8}	50 {0.5}	30 {0.3}	20 {0.2}	—
	270 {2.8}	80 to 240 {0.8 to 2.4}	—	—	—	2940 {30.0}	2940 {30.0}	2330 {23.8}	1340 {13.7}	840 {8.6}	600 {6.1}	330 {3.4}	200 {2.1}	130 {1.3}	—
HA4R	140 {1.4}	20 to 98 {0.2 to 1.0}	—	—	—	—	—	570 {5.8}	330 {3.4}	200 {2.1}	150 {1.5}	80 {0.8}	50 {0.5}	30 {0.3}	20 {0.2}
	270 {2.8}	80 to 240 {0.8 to 2.4}	—	—	—	—	—	2940 {30.0}	2160 {22.0}	1460 {14.9}	1030 {10.5}	580 {5.9}	360 {3.7}	220 {2.3}	140 {1.4}
VA5R	140 {1.4}	20 to 98 {0.2 to 1.0}	—	—	—	—	—	—	—	280 {2.9}	200 {2.0}	110 {1.1}	80 {0.8}	40 {0.4}	30 {0.3}
	270 {2.8}	80 to 240 {0.8 to 2.4}	—	—	—	—	—	—	—	2000 {20.4}	1410 {14.4}	790 {8.1}	500 {5.1}	300 {3.1}	200 {2.0}
PSA6R	400 {4.0} *1	200 to 340 {2.0 to 3.5}	—	—	—	—	—	—	—	2940 {30.0}	2940 {30.0}	1660 {16.9}	—	—	—
	500 {5.0} *2	200 to 390 {2.0 to 4.0}	—	—	—	—	—	—	—	—	—	1660 {16.9}	1060 {10.8}	660 {6.7}	—
	400 {4.0} *3	200 to 340 {2.0 to 3.5}	—	—	—	—	—	—	—	—	—	—	1060 {10.8}	660 {6.7}	440 {4.5}
PSA7R	400 {4.0} *2	200 to 270 {2.0 to 2.8}	—	—	—	—	—	—	—	—	—	2940 {30.0}	2190 {22.3}	1320 {13.3}	—
	400 {4.0} *3	200 to 305 {2.0 to 3.0}	—	—	—	—	—	—	—	—	—	—	2190 {22.3}	1320 {13.3}	780 {7.9}

Note) 1. Take care not to cause the maximum allowable differential pressure to exceed the maximum operating pressure designated by ANSI B 16. 34-1981 or JIS B2201-1984.

*2. *1…Applicable to valve sizes of 2-1/2 to 4 inches, *2…Applicable to valve size of 6 inches, *3…Applicable to valve size 8 inches.*

Allowable differential pressure

Contoured type soft seat (%TF, LTF, %T,LT) : PTFE packing
Valves with type DAP actuator

Table 15. Air-to-close and Air-to-open

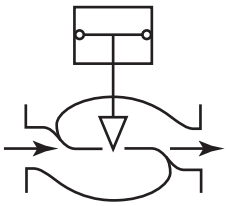

Actuator model No.	Supply pressure kPa{kgf/cm²}	Differential pressure (by port size (inches)) kPa {kgf/cm²}					
		2-1/2	3	4	5	6	8
DAP560	290 {3.0}	2940 {30.0}	2530 {25.8}	1420 {14.5}	900 {9.2}	550 {5.6}	——
	390 {4.0}	2940 {30.0}	2940 {30.0}	1910 {19.5}	1220 {12.5}	740 {7.6}	——
	490 {5.0}	2940 {30.0}	2940 {30.0}	2390 {24.4}	1540 {15.7}	930 {9.5}	——
DAP1000	290 {3.0}	2940 {30.0}	2940 {30.0}	2530 {25.8}	1620 {16.5}	990 {10.1}	590 {6.0}
	390 {4.0}	2940 {30.0}	2940 {30.0}	2940 {30.0}	2190 {22.3}	1320 {13.5}	780 {8.0}
	490 {5.0}	2940 {30.0}	2940 {30.0}	2940 {30.0}	2740 {28.0}	1670 {17.0}	990 {10.1}
DAP1500	290 {3.0}	——	——	——	2440 {24.9}	1480 {15.1}	890 {9.1}
	390 {4.0}	——	——	——	2940 {30.0}	1990 {20.3}	1210 {12.3}
	490 {5.0}	——	——	——	2940 {30.0}	2500 {25.5}	1510 {15.4}

Note) 1. When a backup system for pressure drop at the air source is used, select the allowable differential pressure from whichever is lower-constant supplied air pressure or backup system set pressure (trip pressure).

2. Take care not to cause the maximum allowable differential pressure to exceed the maximum operating pressure designated by ANSI B 16. 34-1981 or JIS B2201-1984.

Allowable differential pressure

Quick-opening-type metal (CoCr-A) seat (QS) : PTFE packing
Valve with Type PSA, HA or VA actuator

Table 16. Air-to-close

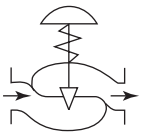

Actuator model No.	Supply pressure kPa {kgf/cm²}	Differential pressure (by port size (inches)) kPa {kgf/cm²}						
		1-1/2	2	2-1/2	3	4	6	8
PSA1D	140 {1.4}	320 {3.3}	200 {2.0}	—	—	—	—	—
	290 {3.0}	1470 {15.0}	960 {9.8}	—	—	—	—	—
HA2D	140 {1.4}	1090 {11.1}	600 {6.1}	400 {4.1}	300 {3.1}	150 {1.5}	—	—
	290 {3.0}	3060 {31.2}	1920 {19.6}	1220 {12.5}	910 {9.3}	490 {5.0}	—	—
HA3D	140 {1.4}	1920 {19.6}	1060 {10.8}	720 {7.4}	540 {5.5}	250 {2.6}	120 {1.2}	—
	290 {2.8}	3920 {40.0} / 5390 {55.0}	3400 {34.7}	2170 {22.1}	1620 {16.5}	870 {8.9}	390 {4.0}	—
HA4D	140 {1.4}	—	—	1240 {12.7}	930 {9.5}	450 {4.6}	200 {2.1}	150 {1.5}
	290 {3.0}	—	—	3750 {38.2}	2790 {28.5}	1520 {15.5}	680 {6.9}	460 {4.7}
VA5D	140 {1.4}	—	—	—	—	—	280 {2.9}	200 {2.1}
	290 {3.0}	—	—	—	—	—	850 {8.7}	580 {5.9}
Spring range kPa {kgf/cm²}		20 to 51 {0.2 to 0.52}	20 to 61 {0.2 to 0.62}	20 to 59 {0.2 to 0.6}	20 to 59 {0.2 to 0.6}	20 to 72 {0.2 to 0.73}	20 to 67 {0.2 to 0.68}	20 to 72 {0.2 to 0.73}

Table 17. Air-to-open

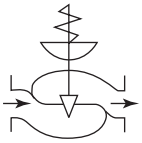

Actuator model No.	Supply pressure kPa {kgf/cm²}	Initial spring compression kPa {kgf/cm²}	Differential pressure (by port size (inches)) kPa {kgf/cm²}						
			1-1/2	2	2-1/2	3	4	6	8
PSA1R	140 {1.4}	20 {0.2}	110 {1.1}	70 {0.7}	—	—	—	—	—
	270 {2.8}	80 {0.8}	490 {5.0}	310 {3.2}	—	—	—	—	—
HA2R	140 {1.4}	20 {0.2}	240 {2.5}	170 {1.7}	98 {1.0}	80 {0.8}	40 {0.4}	—	—
	270 {2.8}	80 {0.8}	981 {10.0}	640 {6.5}	400 {4.1}	300 {3.1}	180 {1.8}	—	—
HA3R	140 {1.4}	20 {0.2}	440 {4.5}	290 {3.0}	180 {1.8}	140 {1.4}	80 {0.8}	30 {0.3}	—
	270 {2.8}	80 {0.8}	1740 {17.8}	1170 {11.9}	720 {7.4}	540 {5.5}	300 {3.1}	140 {1.4}	—
HA4R	140 {1.4}	20 {0.2}	—	—	310 {3.2}	240 {2.4}	140 {1.4}	60 {0.6}	40 {0.4}
	270 {2.8}	80 {0.8}	—	—	1240 {12.7}	930 {9.5}	530 {5.4}	240 {2.4}	160 {1.6}
VA5R	140 {1.4}	20 {0.2}	—	—	—	—	190 {1.9}	80 {0.8}	50 {0.5}
	270 {2.8}	80 {0.8}	—	—	—	—	720 {7.4}	320 {3.3}	220 {2.2}
PSA6R	500 {5.0}	200 {2.0}	—	—	—	—	1410 {14.4}	620 {6.3}	—

Allowable differential pressure

Contoured type metal seat (%CF, LCF, %C, LC) : Graphite packing "P6610+P6528" (+230 to +500 °C) Valves with type PSA, HA or VA actuator

Table 18. Air-to-close

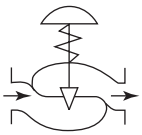

Actuator model No.	Supply pressure kPa {kgf/cm²}	Spring range kPa {kgf/cm²}	Differential pressure (kPa {kgf/cm²})												
			Cv value			Port size (inches)									
			2.5	4.0	6.3	1	1-1/4	1-1/2	2	2-1/2	3	4	5	6	8
HA2D	390 {4.0}	80 to 240 {0.8 to 2.4}	3920 {40.0}	3920 {40.0}	3920 {40.0}	3920 {40.0}	3920 {40.0}	3380 {34.4}	1950 {19.8}	1230 {12.5}	870 {8.8}	480 {4.8}	—	—	—
			9810 {100}	9810 {100}	9810 {100}	7830 {79.8}	4770 {48.6}								
HA3D			—	—	—	3920 {40.0}	3920 {40.0}	3920 {40.0}	3470 {35.3}	2180 {22.2}	1540 {15.7}	860 {8.7}	550 {5.6}	330 {3.3}	—
						9810 {100}	8470 {86.3}	6010 {61.2}							
HA4D			—	—	—	3920 {40.0}	3920 {40.0}	3920 {40.0}	3920 {40.0}	3860 {39.3}	2720 {27.7}	1530 {15.6}	980 {9.9}	590 {6.0}	370 {3.7}
						9810 {100}	9810 {100}	9810 {100}	6140 {62.6}						
VA5D	270 {2.8}	40 to 200 {0.4 to 2.0}	—	—	—	3920 {40.0}	3920 {40.0}	3920 {40.0}	2910 {29.6}	1830 {18.6}	1290 {13.1}	720 {7.3}	460 {4.6}	280 {2.8}	170 {1.7}
						9810 {100}	7110 {72.5}	5040 {51.3}							

Table 19. Air-to-open

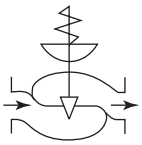

Actuator model No.	Supply pressure kPa {kgf/cm²}	Spring range kPa {kgf/cm²}	Differential pressure (kPa {kgf/cm²})												
			Cv value			Port size (inches)									
			2.5	4.0	6.3	1	1-1/4	1-1/2	2	2-1/2	3	4	5	6	8
HA2R	270 {2.8}	80 to 240 {0.8 to 2.4}	3920 {40.0}	3920 {40.0}	3920 {40.0}	3410 {34.7}	2080 {21.2}	1470 {14.9}	850 {8.6}	530 {5.4}	370 {3.7}	210 {2.1}	—	—	—
			9810 {100}	9810 {100}	5900 {60.1}										
HA3R			3920 {40.0}	3920 {40.0}	3920 {40.0}	3920 {40.0}	3690 {37.6}	2610 {26.6}	1510 {15.3}	950 {9.6}	670 {6.8}	370 {3.7}	240 {2.4}	140 {1.4}	—
			9810 {100}	9810 {100}	9810 {100}	6050 {61.6}									
HA4R			3920 {40.0}	3920 {40.0}	3920 {40.0}	3920 {40.0}	3920 {40.0}	3920 {40.0}	2750 {28.0}	1730 {17.6}	1220 {12.4}	680 {6.9}	440 {4.4}	260 {2.6}	160 {1.6}
			9810 {100}	9810 {100}	9810 {100}	9810 {100}	6720 {68.5}	4770 {48.6}							
VA5R			—	—	—	3920 {40.0}	3920 {40.0}	3920 {40.0}	3570 {36.4}	2250 {22.9}	1580 {16.1}	890 {9.0}	570 {5.8}	340 {3.4}	210 {2.1}
						9810 {100}	8720 {88.9}	6180 {63.0}							
PSA6R	400 {4.0} *1	200 to 340 {2.0 to 3.5}	—	—	—	3920 {40.0}	3920 {40.0}	3920 {40.0}	3920 {40.0}	3920 {40.0}	3920 {40.0}	2370 {24.1}	—	—	—
						9810 {100}	9810 {100}	9810 {100}	9510 {96.9}	5980 {60.9}	4220 {43.0}				
	500 {5.0} *2	200 to 390 {2.0 to 4.0}	—	—	—	—	—	—	—	—	—	2730 {24.1}	1520 {15.5}	930 {9.4}	—
	400 {4.0} *3	200 to 340 {2.0 to 3.5}										—	1520 {15.5}	930 {9.4}	590 {6.0}
PSA7R	400 {4.0} *2	200 to 270 {2.0 to 2.8}	—	—	—	—	—	—	—	—	—	4000 {40.7}	2560 {26.1}	1560 {15.9}	—
	400 {4.0} *3	200 to 305 {2.0 to 3.0}										—	2560 {26.1}	1560 {15.9}	970 {9.8}

Note) *1. Take care not to cause the maximum allowable differential pressure to exceed the maximum operating pressure designated by ANSI B 16. 34-1981 or JIS B2201-1984.*

2. The upper figures denote the operating allowable differential pressure. The lower denote allowable differential pressure at full closure.

*3. *1…Applicable to valve sizes of 2-1/2 to 4 inches, *2…Applicable to valve size of 6 inches, *3…Applicable to valve size 8 inches.*

Allowable differential pressure

Contoured type metal seat (%CF, LCF, %C, LC) : Graphite packing "P6610+P6528" (+230 to +500 °C) Valves with type DAP actuator

Table 20. Air-to-close and Air-to-open

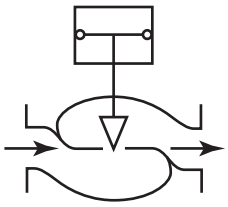

Actuator model No.	Supply pressure kPa{kgf/cm²}	Differential pressure (by port size (inches)) kPa {kgf/cm²}							
		1-1/2	2	2-1/2	3	4	5	6	8
DAP560	290 {3.0}	3920 {40.0} 9810 {100}	3920 {40.0} 7730 {78.8}	3920 {40.0} 4770 {48.6}	3430 {34.9}	1490 {15.1}	950 {9.6}	580 {5.9}	—
	390 {4.0}	3920 {40.0} 9810 {100}	3920 {40.0} 9810 {100}	3920 {40.0} 6860 {69.9}	3920 {40.0} 4800 {48.9}	2210 {22.5}	1410 {14.3}	860 {8.7}	—
	490 {5.0}	3920 {40.0} 9810 {100}	3920 {40.0} 9810 {100}	3920 {40.0} 8630 {88.0}	3920 {40.0} 6080 {61.9}	2920 {29.7}	1870 {19.0}	1140 {11.6}	—
DAP1000	290 {3.0}	—	—	3920 {40.0} 8090 {82.4}	3920 {40.0} 5830 {59.4}	2540 {25.9}	1620 {16.5}	990 {10.0}	610 {6.2}
	390 {4.0}	—	—	3920 {40.0} 9810 {100}	3920 {40.0} 8600 {87.6}	3740 {38.1}	2390 {24.3}	1460 {14.8}	900 {9.1}
	490 {5.0}	—	—	3920 {40.0} 9810 {100}	3920 {40.0} 9810 {100}	3920 {40.0} 4950 {50.4}	3170 {32.3}	1930 {19.6}	1200 {12.2}
DAP1500	290 {3.0}	—	—	—	—	3900 {39.7}	2490 {25.3}	1520 {15.5}	940 {9.5}
	390 {4.0}	—	—	—	—	3920 {40.0} 5760 {58.7}	3680 {37.5}	2250 {22.9}	1390 {14.1}
	490 {5.0}	—	—	—	—	3920 {40.0} 7620 {77.7}	3920 {40.0} 4870 {49.6}	2970 {30.2}	1840 {18.7}

Note) 1. *When a backup system for pressure drop at the air source is used, select the allowable differential pressure from whichever is lower-constant supplied air pressure or backup system set pressure (trip pressure).*

2. *Take care not to cause the maximum allowable differential pressure to exceed the maximum operating pressure designated by ANSI B 16. 34-1981 or JIS B2201-1984.*

3. *The upper figures denote the operating allowable differential pressure. The lower denote allowable differential pressure at full closure.*

Allowable differential pressure

Contoured type metal seat (%CF, LCF, %C, LC) : Graphite packing "P6610+M8590" (+500 to +566 °C)
Valves with type PSA, HA or VA actuator

Table 21. Air-to-close

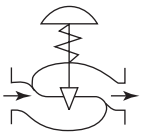

Actuator model No.	Supply pressure kPa {kgf/cm²}	Spring range kPa {kgf/cm²}	Differential pressure (kPa {kgf/cm²})												
			Cv value			Port size (inches)									
			2.5	4.0	6.3	1	1-1/4	1-1/2	2	2-1/2	3	4	5	6	8
HA2D	390 {4.0}	80 to 240 {0.8 to 2.4}	3920 {40.0} 9810 {100}	3920 {40.0} 9810 {100}	3920 {40.0} 9810 {100}	3920 {40.0} 7320 {74.6}	3920 {40.0} 4470 {45.5}	3170 {32.3}	1830 {18.6}	1150 {11.7}	810 {8.2}	450 {4.5}	—	—	—
HA3D			—	—	—	3920 {40.0} 9810 {100}	3920 {40.0} 7930 {80.8}	3920 {40.0} 5620 {57.3}	3240 {33.0}	2040 {20.8}	1440 {14.6}	810 {8.2}	510 {5.2}	310 {3.1}	—
HA4D			—	—	—	3920 {40.0} 9810 {100}	3920 {40.0} 9810 {100}	3920 {40.0} 9810 {100}	3920 {40.0} 5820 {59.3}	3660 {37.3}	2580 {26.3}	1450 {14.7}	930 {9.4}	560 {5.7}	350 {3.5}
VA5D	270 {2.8}	40 to 200 {0.4 to 2.0}	—	—	—	9530 {97.1}	5810 {59.2}	3920 {40.0} 4120 {42.0}	2380 {24.2}	1500 {15.2}	1050 {10.7}	590 {6.0}	380 {3.8}	230 {2.3}	140 {1.4}

Table 22. Air-to-open

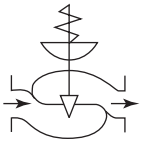

Actuator model No.	Supply pressure kPa {kgf/cm²}	Spring range kPa {kgf/cm²}	Differential pressure (kPa {kgf/cm²})												
			Cv value			Port size (inches)									
			2.5	4.0	6.3	1	1-1/4	1-1/2	2	2-1/2	3	4	5	6	8
HA2R	270 {2.8}	80 to 240 {0.8 to 2.4}	3920 {40.0} 9260 {94.4}	3920 {40.0} 9260 {94.4}	3920 {40.0} 5020 {51.1}	2900 {29.5}	1770 {18.0}	1250 {12.7}	720 {7.3}	450 {4.5}	320 {3.2}	180 {1.8}	—	—	—
HA3R			3920 {40.0} 9810 {100}	3920 {40.0} 9810 {100}	3920 {40.0} 8920 {90.9}	3920 {40.0} 5150 {52.5}	3140 {32.0}	2230 {22.7}	1280 {13.0}	810 {8.2}	570 {5.8}	320 {3.2}	200 {2.0}	120 {1.2}	—
HA4R			3920 {40.0} 9810 {100}	3920 {40.0} 9810 {100}	3920 {40.0} 9810 {100}	3920 {40.0} 9810 {100}	3920 {40.0} 5950 {60.6}	3920 {40.0} 4220 {43.0}	2430 {24.7}	1530 {15.6}	1080 {11.0}	600 {6.1}	390 {3.9}	230 {2.3}	140 {1.4}
VA5R			—	—	—	3920 {40.0} 9810 {100}	3920 {40.0} 7430 {75.7}	3920 {40.0} 5270 {53.7}	3040 {30.9}	1910 {19.4}	1350 {13.7}	760 {7.7}	480 {4.8}	290 {2.9}	180 {1.8}
PSA6R	400 {4.0} *1	200 to 340 {2.0 to 3.5}	—	—	—	3920 {40.0} 9810 {100}	3920 {40.0} 9810 {100}	3920 {40.0} 9810 {100}	3920 {40.0} 9290 {94.7}	3920 {40.0} 5850 {59.6}	3920 {40.0} 4130 {42.1}	2320 {23.6}	—	—	—
	500 {5.0} *2	200 to 390 {2.0 to 4.0}	—	—	—	—	—	—	—	—	—	2320 {23.6}	1480 {15.0}	900 {9.1}	—
	400 {4.0} *3	200 to 340 {2.0 to 3.5}	—	—	—	—	—	—	—	—	—	—	1480 {15.0}	900 {9.1}	560 {5.7}
PSA7R	400 {4.0} *2	200 to 270 {2.0 to 2.8}	—	—	—	—	—	—	—	—	—	3670 {37.4}	2350 {23.9}	1430 {14.5}	—
	400 {4.0} *3	200 to 305 {2.0 to 3.0}	—	—	—	—	—	—	—	—	—	—	2350 {23.9}	1430 {14.5}	890 {9.0}

Note) 1. *Take care not to cause the maximum allowable differential pressure to exceed the maximum operating pressure designated by ANSI B 16. 34-1981 or JIS B2201-1984.*

2. *The upper figures denote the operating allowable differential pressure. The lower denote allowable differential pressure at full closure.*

3. **1…Applicable to valve sizes of 2-1/2 to 4 inches, *2…Applicable to valve size of 6 inches, *3…Applicable to valve size 8 inches.*

Allowable differential pressure

Contoured type metal seat (%CF, LCF, %C, LC) : Graphite packing "P6610+M8590" (+500 to +566 °C) Valves with type VP actuator

Table 23. Air-to-close and Air-to-open

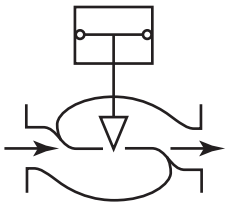

Actuator model No.	Supply pressure kPa{kgf/cm²}	Differential pressure (by port size (inches)) kPa {kgf/cm²}							
		1-1/2	2	2-1/2	3	4	5	6	8
DAP560	290 {3.0}	3920 {40.0}	3920 {40.0}	3590 {36.6}	2530 {25.7}	1420 {14.4}	910 {9.2}	550 {5.6}	—
		9810 {100}	5700 {58.1}						
	390 {4.0}	3920 {40.0}	3920 {40.0}	3920 {40.0}	3800 {38.7}	2130 {21.7}	1360 {13.8}	830 {8.4}	—
		9810 {100}	8550 {87.1}	5380 {54.8}					
	490 {5.0}	3920 {40.0}	3920 {40.0}	3920 {40.0}	3920 {40.0}	2850 {29.0}	1820 {18.5}	1110 {11.3}	—
		9810 {100}	9810 {100}	7180 {73.2}	5070 {51.6}				
DAP1000	290 {3.0}	—	—	3920 {40.0}	3920 {40.0}	2410 {24.5}	1540 {15.7}	940 {9.5}	580 {5.9}
				6090 {62.1}	4300 {43.8}				
	390 {4.0}	—	—	3920 {40.0}	3920 {40.0}	3620 {36.9}	2320 {23.6}	1410 {14.3}	880 {8.9}
				9140 {93.2}	6450 {65.7}				
	490 {5.0}	—	—	3920 {40.0}	3920 {40.0}	3920 {40.0}	3090 {31.5}	1880 {19.1}	1170 {11.9}
				9810 {100}	8600 {87.6}	4830 {49.2}			
DAP1500	290 {3.0}	—	—	—	—	3710 {37.8}	2370 {24.1}	1450 {14.7}	900 {9.1}
	390 {4.0}	—	—	—	—	3920 {40.0}	3560 {36.3}	2170 {22.1}	1350 {13.7}
						5570 {56.7}			
	490 {5.0}	—	—	—	—	3920 {40.0}	3920 {40.0}	2900 {29.5}	1800 {18.3}
						7430 {75.7}	4750 {48.4}		

Note) 1. *When a backup system for pressure drop at the air source is used, select the allowable differential pressure from whichever is lower-constant supplied air pressure or backup system set pressure (trip pressure).*

2. *Take care not to cause the maximum allowable differential pressure to exceed the maximum operating pressure designated by ANSI B 16. 34-1981 or JIS B2201-1984.*

3. *The upper figures denote the operating allowable differential pressure. The lower denote allowable differential pressure at full closure.*

DIMENSIONS

Table 24. Face-to-face dimensions

[Unit: mm]

Nominal size (inches)	A							
	JIS 10KFF, RF ANSI 125FF JPI 125FF ANSI 150RF JPI 150RF *	JIS 16KRF	JIS 20KRF JIS 30KRF ANSI 300RF JPI 300RF *	JIS 40KFF, RF ANSI 600RF JPI 600RF *	JIS 16K Tongue and groove JIS 16K Male and female	JIS 20K Tongue and groove JIS 20K Male and female	JIS 30K Tongue and groove JIS 30K Male and female	JIS 40K Tongue and groove JIS 4K Male and female
1-1/2	222	231	235	251	235	236	248	251
2	254	263	267	286	265	267	276	286
2-1/2	276	288	292	311	290	292	303	311
3	298	313	317	337	310	317	326	337
4	352	364	368	394	360	368	379	394
6	451	465	473	508	475	473	486	508
8	543	560	568	610	570	568	580	610

Nominal size (inches)	A						
	ANSI 150RJ JPI 150RJ	ANSI 300RJ JPI 300RJ	ANSI 600RJ JPI 600RJ	ANSI 300LG JPI 300LG	ANSI 600LG JPI 600LG	ANSI 150 JPI 150 (SW, BW) *	ANSI 300,600 JPI 300,600 (SW, BW) *
1-1/2	235	248	251	244	248	251	251
2	267	283	289	276	283	286	286
2-1/2	289	308	314	302	308	311	311
3	311	333	340	327	333	337	337
4	365	384	397	378	391	394	394
6	464	489	511	483	505	473	508
8	556	584	613	578	606	568	610

*Note) * : Face-to-face dimensions conform to following standards.*
- IEC 60534-3-1 : 2001 - IEC 60534-3-3 : 1998 (2-1/2 inches or over)
- JIS B 2005-3-1 : 2005 - JIS B 2005-3-3 : 2005 (2-1/2 inches or over)

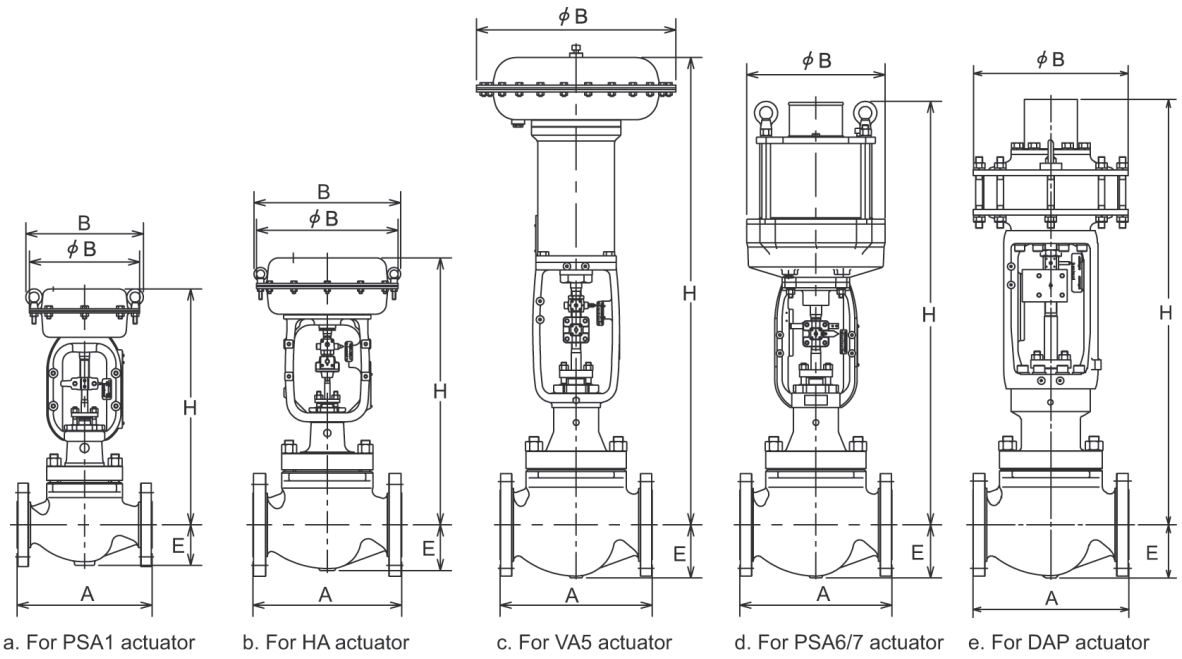

Figure 8. Face-to-face and external dimensions

DIMENSIONS

Table 25. External dimensions

[Unit: mm]

Nominal size (inches)	Actuator model No.	H					B	ϕ B	E
		Plain bonnet	Extension bonnet Type 1	Extension bonnet Type 2		Bellow type bonnet			
				Integral-cast	Welded type				
1-1/2	PSA1D, R	446	631	746	986	626	230	218	70
	HA2D, R	500	665	780	1020	660	281	267	
	HA3D, R	590	760	875	1140	810	363	350	
2	PSA1D, R	446	636	751	991	626	230	218	80
	HA2D, R	500	670	785	1025	660	281	267	
	HA3D, R	595	765	875	1140	810	363	350	
2-1/2	HA2D, R	575	745/755	880	1130	795	281	267	88
	HA3D, R	630	800/810	930	1180	850	363	350	
	HA4D, R	865	1035/1045	1165	1495	-	520	470	
	DAP560	1175	1325	-	-	-	-	380	
3	HA2D, R	580	755/765	900	1135	800	281	267	98
	HA3D, R	635	810/820	955	1190	855	363	350	
	HA4D, R	870	1045/1055	1190	1505	-	520	470	
	DAP560	1190	1375	-	-	-	-	380	
4	HA2D, R	610	810/820	915	1150	830	281	267	113
	HA3D, R	660	860/870	1020	1205	880	363	350	
	HA4D, R	890	1100/1110	1255	1520	-	520	470	
	VA5D	1300	1515	1710	1940	-	-	620	
	VA5R	1420	1635	1820	2050	-	-	620	
	PSA6R	1255	1470	1655	1885	-	-	476	
	DAP560	1185	1395	-	-	-	-	380	
	DAP1000	1215	1455	-	-	-	-	470	
6	HA3D, R	785	1020/1045	1250	1385	1075	363	350	170
	HA4D, R	955	1190/1215	1425	1570	1245	520	470	
	VA5D	1360	1620	1870	2000	-	-	620	
	VA5R	1480	1740	1980	2110	-	-	620	
	PSA6R	1315	1575	1815	1945	-	-	476	
	PSA7R	1745	2005	2245	2375	-	-	580	
	DAP560	1245	1515	-	-	-	-	380	
	DAP1000	1315	1545	-	-	-	-	470	
	DAP1500	1315	1560	-	-	-	-	570	
8	HA4D, R	1090	1350	1580	1710	1340	520	470	220
	VA5D	1475	1740	2025	2155	1785	-	620	
	VA5R	1585	1850	2145	2275	-	-	620	
	PSA6R	1735	2000	2295	2425	-	-	476	
	PSA7R	2165	2430	2725	2855	-	-	580	
	DAP560	1465	1730	-	-	-	-	380	
	DAP1000	1440	1790	-	-	-	-	470	
	DAP1500	1485	1755	-	-	-	-	570	

Note) 1. "H" dimensions are applicable when a hand wheel is not provided. When top-mounted hand wheel HA or VA actuators or side-mounted hand wheel PSA6R are used, add the hand wheel dimentsions designated in respective specification sheets (No.SS2-8213-0500 for Type HA actuators; No.SS2-8210-0100 and SS2-PSA100-0100 for Type VA, PSA6R actuators.

2. "H" dimensions of Extended bonnet Type 1 are as follows: The left side JIS 10K and ANSI 150, and the right side for JIS 16K and ANSI 300 or over.

Weight

Table 26. Weight [Unit: kg]

Nominal size (inches)	Actuator model No.	Weight															
		Flanged type ANSI 150, JIS10K, JPI 150				Flanged type ANSI 300, JIS16K, 20K, 30K JPI300				Flanged type ANSI 600, JIS40K, JPI600				Welded type ANSI 150, 300, 600, JIS 10K, 16K, 20K, 30K JPI 150, 300, 600			
		Plain	Extension type 1 bellows Type	Extension type 2		Plain	Extension type 1 bellows Type	Extension type 2		Plain	Extension type 1 bellows Type	Extension type 2		Plain	Extension type 1 bellows Type	Extension type 2	
				Integral-cast	Welded type			Integral-cast	Welded type			Integral-cast	Welded type			Integral-cast	Welded type
1-1/2	PSA1D, R	24	27	30	32	29	32	35	37	37	40	43	45	29	32	35	37
	HA2D, R	31	34	37	39	36	39	42	44	44	47	50	52	36	39	42	44
	HA3D, R	43	46	49	51	48	51	54	56	56	59	62	64	48	51	54	56
2	PSA1D, R	30	33	36	38	35	38	41	43	40	43	46	48	35	38	41	43
	HA2D, R	37	40	43	45	42	45	48	50	47	50	53	55	42	45	48	50
	HA3D, R	49	52	55	57	54	57	60	62	59	62	65	67	54	57	60	62
2-1/2	HA2D, R	43	47	51	53	48	52	56	58	65	69	73	75	48	52	56	58
	HA3D, R	55	59	63	65	60	64	68	70	77	81	85	87	60	64	68	70
	HA4D, R	86	90	94	96	91	95	99	101	108	112	116	118	91	95	99	101
	DAP560	188	192	-	-	193	197	-	-	210	214	-	-	193	197	-	-
3	HA2D, R	53	59	65	68	63	69	75	78	85	91	97	100	63	69	75	78
	HA3D, R	65	71	77	80	75	81	87	90	97	103	109	112	75	81	87	90
	HA4D, R	96	102	108	111	106	112	118	121	128	134	140	143	106	112	118	121
	DAP560	198	204	-	-	208	214	-	-	230	236	-	-	208	214	-	-
4	HA2D, R	63	73	78	81	78	88	93	96	113	123	128	131	75	85	90	93
	HA3D, R	75	85	90	93	90	100	105	108	125	135	140	143	87	97	102	105
	HA4D, R	106	116	121	124	121	131	136	139	156	166	171	174	118	128	133	136
	VA5D	208	218	223	226	223	233	238	241	258	268	273	276	220	230	235	238
	VA5R	233	243	248	251	248	258	263	266	283	293	298	301	245	255	260	263
	PSA6R	213	223	228	231	228	238	243	246	258	273	278	281	225	235	240	243
	DAP560	208	218	-	-	223	233	-	-	258	268	-	-	220	230	-	-
	DAP1000	248	258	-	-	263	273	-	-	298	308	-	-	260	270	-	-
6	HA3D, R	157	172	179	182	187	202	209	212	237	252	259	262	177	192	199	202
	HA4D, R	188	203	210	213	218	233	240	243	268	283	290	293	208	223	230	233
	VA5D	290	305	312	315	320	335	342	345	370	385	392	395	310	325	332	335
	VA5R	315	330	337	340	345	360	367	370	395	410	417	420	335	350	357	360
	PSA6R	295	310	317	320	325	340	347	350	375	390	397	400	315	330	337	340
	PSA7R	580	595	602	605	610	625	632	635	660	675	682	685	600	615	622	625
	DAP560	290	305	-	-	320	335	-	-	370	385	-	-	310	325	-	-
	DAP1000	330	345	-	-	360	375	-	-	410	425	-	-	350	365	-	-
	DAP1500	460	475	-	-	490	505	-	-	540	555	-	-	480	495	-	-
8	HA4D, R	268	288	298	303	318	338	348	353	438	458	468	473	308	328	338	343
	VA5D	370	390	400	405	420	440	450	455	540	560	570	575	410	430	440	445
	VA5R	395	415	425	430	445	465	475	480	565	585	595	600	435	455	465	470
	PSA6R	420	440	450	455	470	490	500	505	590	610	620	625	460	480	490	495
	PSA7R	705	725	735	740	755	775	785	790	875	895	905	910	745	765	775	780
	DAP560	370	390	-	-	420	440	-	-	540	560	-	-	410	430	-	-
	DAP1000	410	430	-	-	460	480	-	-	580	600	-	-	450	470	-	-
	DAP1500	540	560	-	-	590	610	-	-	710	730	-	-	580	600	-	-

(PSA1, HA and VA5 Actuator)

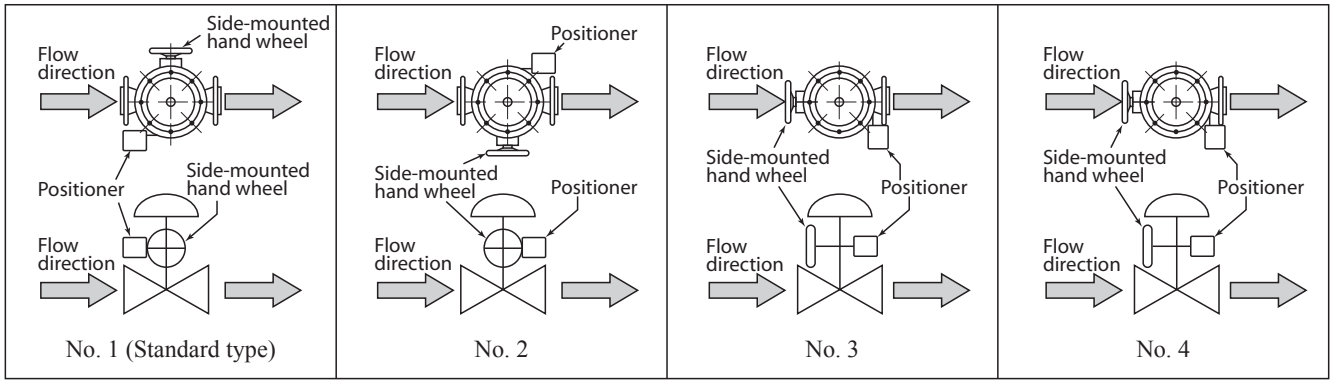

(PSA6 Actuator)

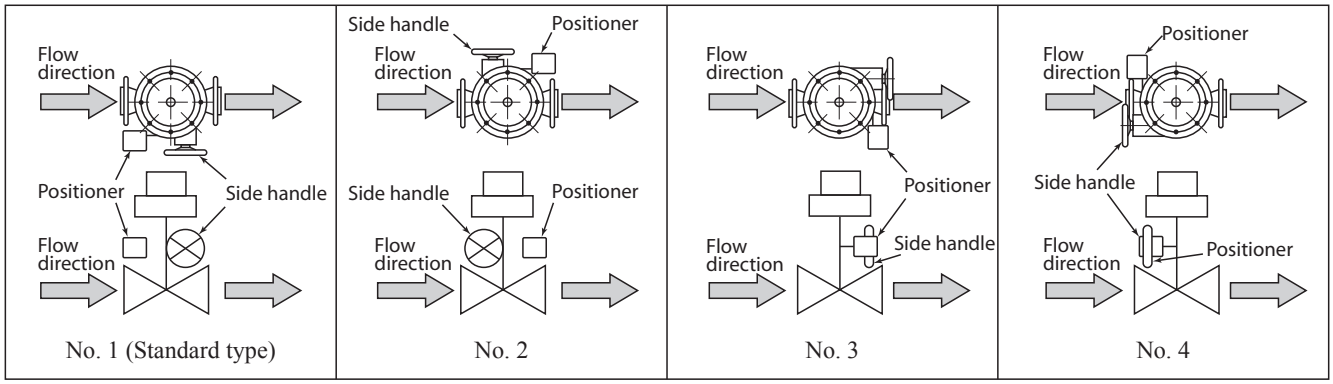

(PSA7 and DAP Actuator)

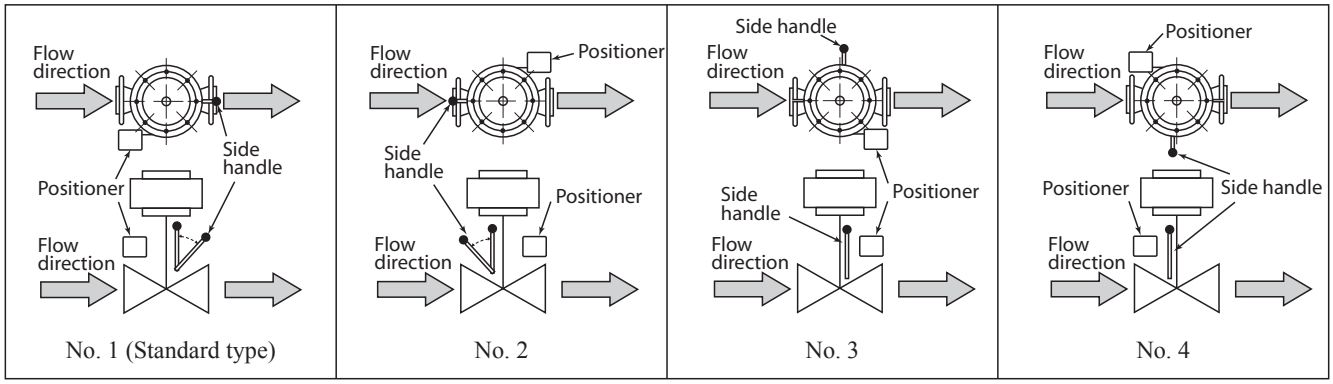

Figure 9. Actuator orientation

Note) Indicate by position number when installation other than the standard type is required.

Ordering information

When ordering, please specify;

1) Model number: HTS
2) Nominal size × Port size
3) Type and rating of end connections
4) Body and trim material, necessity of hardening
5) Type of bonnet
6) Valve and plug characteristics
7) Type of actuator, air pressure to diaphragm
8) Valve action (direct or reverse)
9) Accessories (positioner, hand wheel, pressure regulator with filter and etc.)
10) Special requirement of degreasing, copper free treatment, and etc.
11) Name of flow medium
12) Normal flow and maximum required flow
13) Pressure of flow medium, upstream and downstream pressure at maximum and minimum, required flow
14) Temperature and specific gravity of flow medium
15) Viscosity of flow medium, inclusive or exclusive of slurry

Please read "Terms and Conditions" from the following URL before ordering and use.

https://www.azbil.com/products/factory/order.html

Specifications are subject to change without notice.

Azbil Corporation
Advanced Automation Company

1-12-2 Kawana, Fujisawa
Kanagawa 251-8522 Japan
URL: https://www.azbil.com/

1st edition: Jun. 1995
18th edition: Dec. 2023

No part of this publication may be reproduced or duplicated without the prior written permission of Azbil Corporation.