azbil

Specification

In-line Multivariable Vortex Flow Meters

Models AX2200/2211/2222

Overview

Iinline multivariable vortex flowmeters can measure the volumetric flow rate or mass flow rate of liquids, gases, and steam. The multivariable function of this unit detects the generation of vortices and thereby calculates the volumetric flow rate. Also, it has a built-in platinum resistance temperature detector (RTD) and semiconductor pressure sensor, enabling measurement of mass flow rate, which is compensated for temperature and pressure.
A 24 V DC external power supply and AC power supply are available, in addition to the general-purpose 24 V DC 2-wire system instrumentation mostly used for vortex flowmeters.
Various outputs are supported. This unit can have as many as three 4–20 mA analog outputs, one pulse output, one frequency output, and up to three alarm contacts for process alarms. Any three of five process variables—mass flow rate, volumetric flow rate, temperature, pressure, and calculated density of the fluid—can be assigned to these outputs.
The flowmeter is available with two different structures: one in which the detector and converter are integrated into a single unit, and the other, which is a remote type, in which the detector and converter are separated. A flange connection model and a wafer connection model are available for each structural type.

Features

- The volumetric flow rate or mass flow rate of liquids, gases, and steam can be measured.
- A single unit can output flow rate, temperature, pressure, and calculated density of fluid.
- Highly reliable structure with no moving parts.
- Wide temperature range, from cryogenic (-200 °C) liquefied gases to high-temperature (+400 °C) gases and superheated steam.
- The inline model can be used for pipes with 15A to 200A diameters. (For larger pipe diameters, use the insertion model flowmeter.)
- The settings can be changed using six buttons on the converter display. Since the buttons can be operated using a magnet (included) without opening the converter, the settings can be changed even in hazardous areas and harsh environments.
- Conforms to FM/FMC/ATEX/IECEx explosion-proof standards.

Model AX22_ _ Type Wafer Connection Specification

Overview of Model AX22_ _

Model AX2200 volumetric flowmeter for measuring liquids, gases, and steam
This unit is used to measure liquids that do not require consideration of density variations in the process fluid, such as gasoline, light oil, kerosene, and organic solvents. Also, it is used to measure gases and steam when consideration of density variations is not required.

Model AX2211 flowmeter with temperature compensation function for measuring saturated steam
This unit is used to measure saturated steam. It includes a platinum resistance temperature detector (Pt 1000 Ω). The density is read from a saturated steam table built into the converter, and is used for the conversion to the mass flow rate, which is then output.

Model AX2222 flowmeter with temperature/pressure compensation function for measuring gases and superheated steam
This unit is used to measure superheated steam. It has a built-in platinum resistance temperature detector (Pt 1000 Ω) and pressure sensor. It uses the measured temperature and pressure to calculate the density of various fluids in the converter, and then uses the densities for conversion to the mass flow rate, which is output. Also, three out of a possible five outputs can be selected: mass flow rate, volumetric flow rate, temperature, pressure, and the calculated density.

Common Specifications

Diameter: Flange types: 15, 25, 40, 50, 80, 100, 150, 200 mm
Wafer types: 15, 25, 40, 50, 80, 100 mm
Process fluids: Liquids, gases, steam (saturated steam, superheated steam)

Measurable flow velocity range:

Table 1. Measurable flow velocity (liquid)

Diameter (mm)	Min. measurable flow velocity (m/s)*1, 3	Max. measurable flow velocity (m/s)*4	Max. flow velocity (m/s)
15	0.42	9	9.12
25	0.3	9	9.12
40 to 200	0.3	9	9.12

Table 2. Measurable flow velocity (gas, steam)

Diameter (mm)	Min. measurable flow velocity (m/s)*1, 3	Max. measurable flow velocity (m/s)*4	Max. flow velocity (m/s)
15	$6.1/\sqrt{\text{density}}$(kg/m³)	50	53
25	$6.1/\sqrt{\text{density}}$(kg/m³)	70	75
40 to 200	$6.1/\sqrt{\text{density}}$(kg/m³)	90	91.2

*1 Min. measurable flow velocity indicates the minimum flow velocity that can be detected if there is no disturbance such as vibration. Its accuracy is not specified.
*2 For liquid, the minimum measurable flow velocity is set for the low flow cutoff point as the factory default setting.
*3 For gas and steam, approximately double the minimum measurable flow velocity is set for the low flow cutoff point as the factory default setting. The low flow cutoff setting differs for individual units depending on the sensor's sensitivity.
*4 The max. measurable flow velocity for pipe diameters 15A and 25A differs from the results of calculation by the sizing tool.

Measurement accuracy:

1. Pulse Output

Table 3. Volumetric Flow Rate

Diameter	Reynolds No.	Accuracy (% rdg)	
		Liquid	Gas/ Steam
15 mm	< 9,000	±3.0	±4.0
	≥ 18,000	±0.7	±1.0
25 mm	< 15,000	±1.5	±2.0
	≥ 30,000	±0.7	±1.0
40 mm	< 24,000	±1.5	±2.0
	≥ 48,000	±0.7	±1.0
50 mm	< 30,000	±1.5	±2.0
	≥ 60,000	±0.7	±1.0
80 mm	< 45,000	±1.0	±1.5
	≥ 90,000	±0.7	±1.0
100 mm	< 60,000	±1.0	±1.5
	≥ 120,000	±0.7	±1.0
150 mm	< 90,000	±1.0	±1.5
	≥ 180,000	±0.7	±1.0
200 mm	< 120,000	±1.0	±1.5
	≥ 240,000	±0.7	±1.0

Table 4. Mass Flow Rate

Diameter	Reynolds No.	Accuracy (% rdg)	
		Liquid	Gas/ Steam
15 mm	< 9,000	±3.3	±4.5
	≥ 18,000	±1.0	±1.5
25 mm	< 15,000	±1.8	±2.5
	≥ 30,000	±1.0	±1.5
40 mm	< 24,000	±1.8	±2.5
	≥ 48,000	±1.0	±1.5
50 mm	< 30,000	±1.8	±2.5
	≥ 60,000	±1.0	±1.5
80 mm	< 45,000	±1.3	±2.0
	≥ 90,000	±1.0	±1.5
100 mm	< 60,000	±1.3	±2.0
	≥ 120,000	±1.0	±1.5
150 mm	< 90,000	±1.3	±2.0
	≥ 180,000	±1.0	±1.5
200 mm	< 120,000	±1.3	±2.0
	≥ 240,000	±1.0	±1.5

The indicated output accuracy for the mass flow rate of gases and steam applies when the measured pressure is within 50 to 100 % of the range of the pressure sensor.

2. Analog Output

Volumetric flow rate: Accuracy of volumetric flow rate pulse output + 0.025 % FS

Mass flow rate: Accuracy of mass flow rate pulse output + 0.025 % FS

The indicated output accuracy for the mass flow rate of gases and steam applies when the measured pressure is within 50 to 100 % of the range of the pressure sensor.

Table 5. Temperature, Pressure, Calculated Density

Various outputs	Liquid	Gas/Steam
Temperature	±1 °C	±1 °C
Pressure	±0.3 % FS	±0.3 % FS*
Calculated density	±0.3 % rdg	±0.5 % rdg*

* The indicated output accuracy for the mass flow rate of gases and steam applies when the measured pressure is within 50 to 100 % of the range of the pressure sensor.

Repeatability:

Table 6. Repeatability

Various outputs	Repeatability
Mass flow rate	±0.2 % rdg
Volumetric flow rate	±0.1 % rdg
Temperature	±0.1 °C
Pressure	±0.05 % FS
Calculated density	±0.1 % rdg

Stability after 12 months:

Table 7. Stability

Various outputs	Stability after 12 months
Mass flow rate	±0.2 % rdg
Volumetric flow rate	±0.1 % rdg max.
Temperature	±0.5 °C
Pressure	±0.1 % FS
Calculated density	±0.1 % rdg

Response speed: Settable to between 1 and 100 seconds
Calibration at shipping: Calibrated by Azbil VorTek
Calibration standard: U.S. NIST (National Institute of Standards and Technology) standard
Note: If Japanese traceability is required, calibration must be done additionally by Azbil Kyoto. In this case, select the additional specification "SA" in the model number.

Ambient temperature: -40 to +60 °C
(-40 to +85 °C during transport/storage)
Relative humidity: 0 to 98 % RH (without condensation)
Altitude: -610 to +4268 m
Fluid temperature:

Table 8. Fluid Temperature Range

Specifications	Fluid temperature (°C)
Standard	-50 to +260
High temperature	-50 to +400
Cryogenic temperature	-200 to +50

* Use the high temperature model if the process fluid temperature exceeds 260 °C. Contact us if you use this unit for liquefied gas at temperatures less than -50 °C.

Process fluid pressure: Depends on model number selection (selection of pipe connection and built-in pressure sensor).

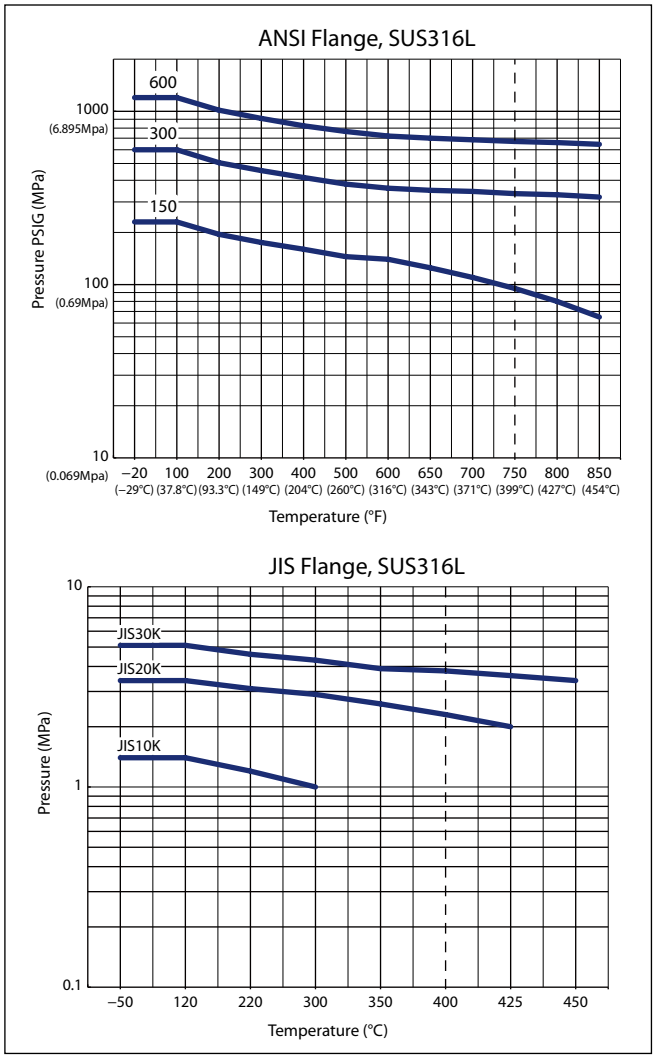

Figure 1. Maximum Operating Pressure

Pressure sensor measuring range: Depends on model number selected.

Table 9. Pressure Sensor Measuring Range

Pressure sensor measuring range (MPa_abs)	
Full scale operating pressure*	Max. over-range pressure**
0.2	0.4
0.7	1.4
2.0	4.0
3.5	7.0
10.0	17.5

* For high-precision measurement, select the lowest measuring range covering the maximum pressure during use.
** To avoid damage, do not subject the pressure sensor to pressure exceeding the pressure resistance.

Flow rate measuring range: Please note that the maximum flow velocity of this unit varies by the diameter.

Pipe and wiring connection ports:

Table 10. Pipe and Wiring Connection Ports

Piping ports		Wiring ports
Wafer connection	Flange connection	
For JIS10/20/30/40K and RF ANSI 150#/300#/600#	JIS10/20/30K RF	3/4 NPT*
	ANSI 150#/300#/600#	

* See Table 16 on p.14.

Material: Converter:

Table 11. Converter Material

Part		Material*
Common parts	Housing	ASTM 383 (ADC12)
	Terminal box cover	ASTM 383 (ADC12)
With display	Cover	ASTM 383 (ADC12)
	Glass	Tempered glass

* Item in ( ) is an equivalent.

Detection terminal: Depends on model number selected.

Table 12. Detection Terminal Wetted Material

Connection	Part	Material*
Common parts	Triangular prism	ASTM CF3M (SCS16A)
	Saddle	ASTM A479 (SUS316L)
	Flow velocity sensor	ASTM A479 (SUS316L)
	Temperature sensor sheath	ASTM A479 (SUS316L)
	Connecting pipe	ASTM A269 (SUS316L-TP)
	Pressure sensor union	SUS316L
	Sensor diaphragm	SUS316L
	Flame arrester	SUS316L
Flange connection	Pipe part	ASTM A312 (SUS316L-TP)
	Flange part	SUSF316L
Wafer connection	Pipe part	ASTM A479 (SUS316L)

* Only models with built-in pressure sensor use PTFE sealant. Item in ( ) is an equivalent.

Finish: Converter section: Weatherproof baked polyester powder finish

Finishing color: Converter body: Dark beige
Converter front cover / rear cover: Light beige

Structure: Protection class: NEMA 4X, IP66

Temperature specs (standard model):
FM/FMC explosion-proof:
Class I, Div. 1, Groups B, C, D
Class II/III, Div. 1, Groups E, F, G
IP66, Type 4X, T6, Ta = -40 to +60 °C
ATEX explosion-proof:
II 2 G Ex db IIB+H2 T6...T2 Gb
II 2 D Ex db IIB+H2 T85 °C Db
-40 °C ≤ Tamb≤ 60 °C
IEC Ex explosion-proof:
Ex db IIB+H2 T6...T2 Gb
Ex tb IIIB T85 °C Db
IP66, TYPE 4X, Ta -40 °C ...+60 °C

Temperature specs (high-temperature model):
FM/FMC explosion-proof:
Class I, Div 1, Groups B,C,D
Class II/III, Div 1, Groups E, F, G
IP66, Type 4X, Ta = -40 °C...+60 °C
ATEX explosion-proof:
Ex db IIB+H2 85 °C...405 °C Gb
Ex tb IIIB T85 °C Db
-40 °C ≤ Tamb≤ 60 °C
IEC Ex explosion-proof:
Ex db IIB+H2 85 °C...405 °C Gb
Ex tb IIIB T85 °C Db
IP66, TYPE 4X, Ta -40 °C...+60 °C

Power supply: Depends on model number selection.
24 V DC loop power supply type (2-wire system):
12 to 36 V DC, 25 mA, 1 W max.
24 V DC external power supply type:
18 to 36 V DC, 300 mA, 9 W max.
100 V AC external power supply type:
85 to 240 V AC, 50 to 60 Hz, 5 W max.

Display: LCD display (16 characters × 2 lines)
* The display direction can be changed in units of 90°.
* Even with a 24 V DC loop power supply, the backlight can be turned on by supplying 24 V DC externally.

Setting/adjustment: Magnet button type local interface

Output: Depends on model number selection.
Analog output: 4 to 20 mA DC
Pulse width: 5 to 36 V DC, 40 mA, 320 mW max.
Pulse width fixed at 50 ms
Saturation voltage when transistor ON (LOW voltage):
0.8 V typ. (see Figure 2)

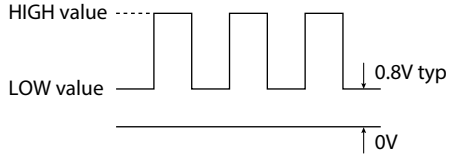

Figure 2. Saturation Voltage when Transistor ON

Frequency output: 5 to 36 V DC, 40 mA, 200 mW max.
Frequency generation range:
1 to 10 kHz
Saturation voltage when transistor ON (LOW voltage):
0.8 V typ. (see Figure 2)

Alarm output: Normal open
5 to 36 V DC, 40 mA, 320 mW max.

Communication: HART
(HART communication load resistance : 250Ω min.)

Table 13. HART registration information

Product Name	Pro-V
HART® Version	5
Manufacturer	Azbil VorTek, LLC.
Manufacturer ID	ID 0x87
Device Type	0x01
Device Revision	6

Note: *Compatibility with another company's host
For information on compatibility with your system, please contact your system's vendor.
*This product's HART-compatible software versions end in "78.02"or a higher number. The software version is displayed when the power is turned on.
*If this product is used in multidrop mode, the number of AX2300 series devices that can be connected is limited. If multidrop mode is required, please contact us.

Pipe mounting orientation: Connectible to horizontal/vertical pipe.

Pressure loss: The following formula calculates pressure loss.
$\Delta P = 0.0011\rho V^2$
ΔP: Pressure loss (kPa)
ρ: process fluid density (kg/m³)
V: flow velocity (m/s)

Anti-cavitation outlet pressure:
If the process fluid is a liquid, to prevent cavitation the pressure in the pipe on the secondary side of this unit, (P_2) must be as shown in the formula below.
$P_2 \geq 2.9 \times \Delta P + 1.3 \times P_v$
P_2: Pressure in pipe on secondary side of this unit (kPa_abs)
ΔP: Pressure loss (kPa)
P_v: Vapor pressure of process fluid under measurement conditions (kPa abs)

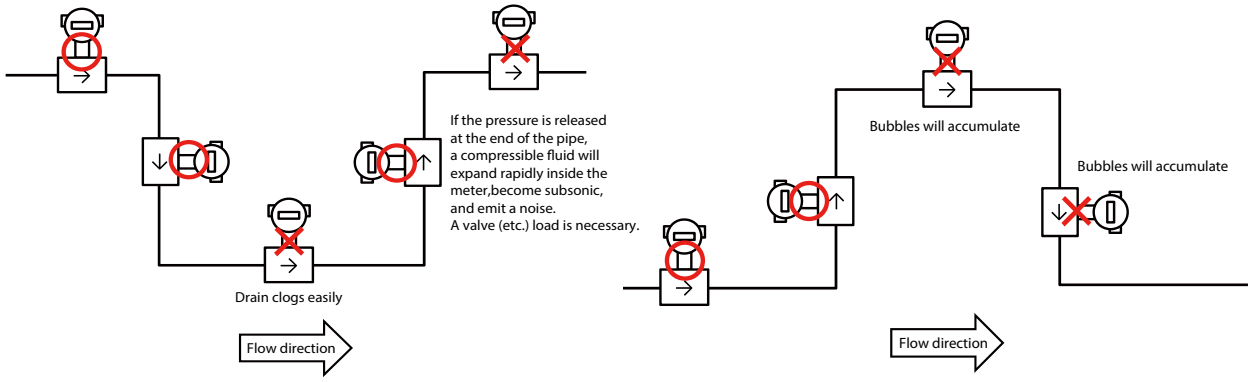

Vortex flowmeter installation (for gas/steam): **Vortex flowmeter installation (for liquid):**

Figure 3. Typical Vortex flowmeter installation

Required straight pipe length: See Figure 4 and Table 14.

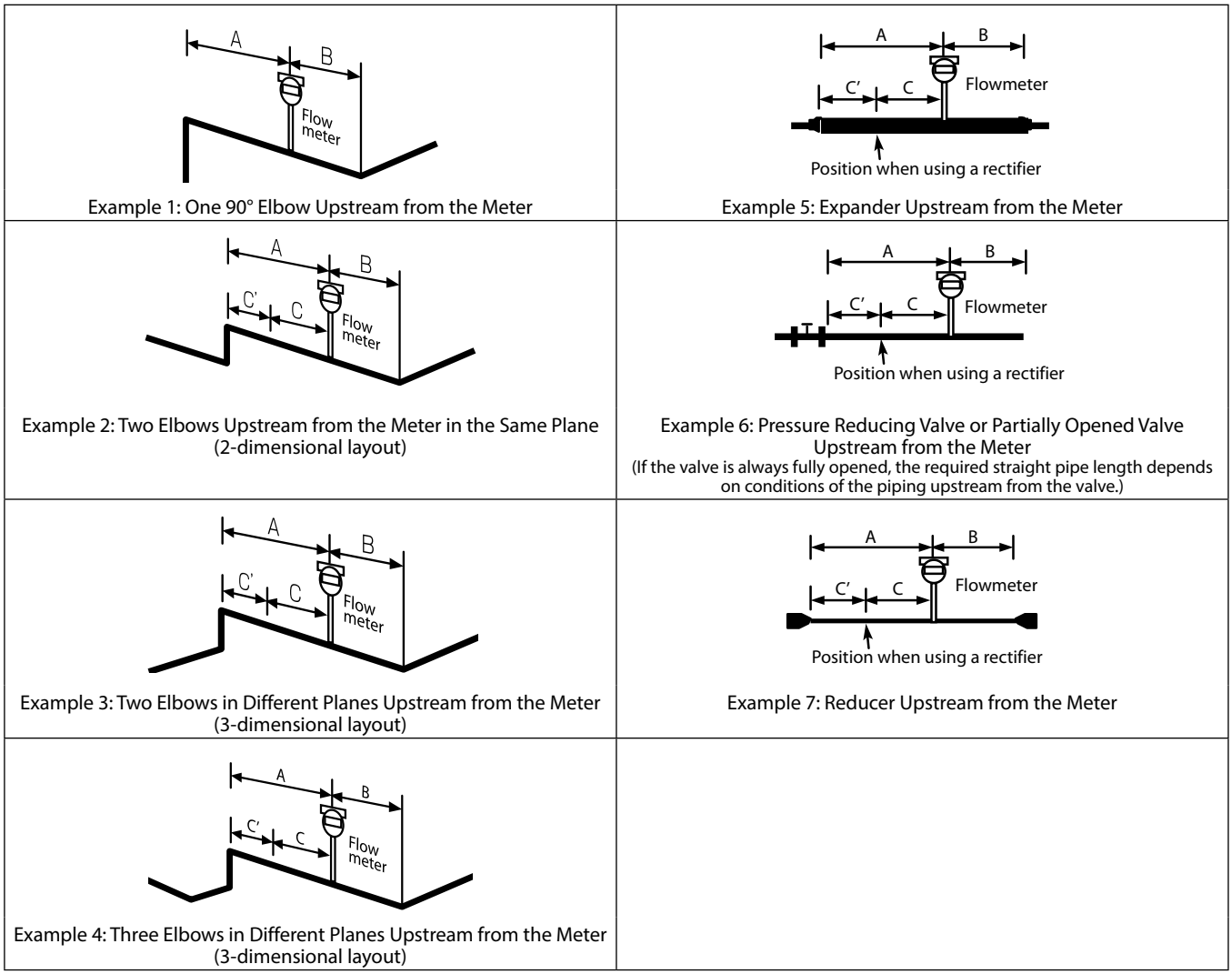

Figure 4. Required Straight Pipe Length

Table 14. Required Straight Pipe Length

Required straight pipe length upstream from the meter						Required straight pipe length downstream from the meter	
Example	Piping layout upstream from the meter	No rectifier	With rectifier			No rectifier	With rectifier
		A	A	C	C′	B	B
1	One 90° elbow upstream	10 D	———	———	———	5 D	5 D
2	Two elbows in the same plane	15 D	10 D	5 D	5 D	5 D	5 D
3	Two elbows in different planes	25 D	10 D	5 D	5 D	10 D	5 D
4	Three elbows in different planes	50 D	20 D	10 D	10 D	20 D	10 D
5	Expander	20 D	10 D	5 D	5 D	5 D	5 D
6	Pressure reducing valve or partly open valve	25 D	10 D	5 D	5 D	10 D	5 D
7	Reducer	10 D	10 D	5 D	5 D	5 D	5 D

Because vortex flow meters are affected by the velocity distribution in the piping, which can cause measurement errors, it is important to install straight pipes of a sufficient length. Note that the required straight pipe length indicated above is the length that is necessary for correcting uneven velocity distribution, and is not for reducing pipe vibration.
If there is a combination of the above piping layouts upstream from the meter, in principle each required straight pipe length should be added.
If the piping near the flowmeter consists of multiple elbows that are separated by 30D or less, install the straight pipe lengths indicated for Examples 2 to 4 above. If elbows are separated by more than 30D, each elbow is considered to be independent. In this case, Example 1 applies.
If there is a combination of various patterns of piping layout that makes calculation of the required straight pipe length difficult, the use of a rectifier is recommended. If a rectifier is used, add C and C' to calculate A with a rectifier.
For example, if the piping consists of the valve of Example 6 and the reducer of Example 7, required straight pipe length A without a rectifier is 35D (25D + 10D). With a rectifier, it can be reduced to 20D (C:10D + C': 10D). In the same manner, for the downstream piping, the required length B without a rectifier is 15D (10D + 5D). With a rectifier, the length can be reduced 10D. The total straight pipe length (upstream plus downstream) can be reduced from 50D (without a rectifier) to 30D (with a rectifier).

Measuring range: The typical measuring ranges by diameter are shown here. The accuracy of the flow rate depends on the fluid and pipe size. For use under conditions other than those shown below, please contact Azbil Corporation.

Table 15. Minimum and Maximum Measured Flow Rates for Water (upper figure: min. flow rate/ lower figure: max. flow rate)
Sizing tool calculation condition: carbon steel pipe for pressure piping STPG JIS G 3454 schedule 40
Water temperature: 20 °C, pressure in pipes: 0.1 MPa (m^3/h)

Diameter (mm)	15	25	40	50	80	100	150	200
Minimum flow rate	0.2	0.5	1.3	2.1	4.7	8.1	19	33
Maximum flow rate	4.97	15.2	37.5	62.7	140	244	553	969

Table 16. Minimum and Maximum Measured Flow Rates for Gases (upper: min., lower: max.)
Sizing tool calculation condition: carbon steel pipe for pressure piping STPG JIS G 3454 schedule 20
Gas temperature: 20 °C. Pipe pressure: various pressures shown in the table (Nm^3/h)

Diameter (mm)		15	25	40	50	80	100	150	200
Pressure (MPa)	0.0	2.9	8.7	22	36	80	139	314	549
		27	118	349	584	1306	2274	5157	9034
	0.5	6.9	22	52	87	194	338	765	1339
		160	705	2080	3475	7774	3532	30682	53748
	1.0	9.3	29	71	118	263	457	1036	1814
		295	1295	3818	6380	14273	4844	56328	98676
	1.5	12	35	85	142	317	552	1251	2190
		430	1887	5564	9299	20800	36205	82087	143800
	2.0	13	40	98	163	364	633	1434	2511
		565	2482	7319	12228	27353	47611	107949	189105
	3.0	16	49	119	198	443	770	1745	3057
		838	3667	10843	18118	40528	70543	159942	208186

Table 17. Minimum and Maximum Measured Flow Rates for Saturated Steam (upper: min. flow rate, lower: max. flow rate)
Sizing tool calculation condition: carbon steel pipe for pressure piping STPG JIS G 3454 schedule 80
Gas temperature: 20 °C, saturation temperature for pipe pressures and pipe pressures: various pressures shown in the table (kg/h)

Diameter (mm)		15	25	40	50	80	100	150	200
Pressure (MPa)	0.0	2.6	7.9	20	33	73	126	286	501
		17	76	224	374	838	1459	3308	5796
	0.5	6	19	45	75	167	291	659	1153
		92	404	1191	1991	4455	7784	17581	30798
	1.0	7.9	25	60	100	223	387	878	1537
		163	718	2117	3533	7915	13777	31236	54720
	1.5	9.5	28	72	119	267	464	1051	1840
		234	1029	3035	5072	11346	19749	44778	78443
	2.0	11	34	82	136	304	529	1199	2101
		305	1341	3956	6610	14787	25737	58355	102226
	3.0	14	40	99	165	369	642	1455	2548
		450	1974	5822	9729	21762	37879	85883	150450

Measurable range

Measured fluid: water **Pipe diameter 50 mm**

According to Table 15, the minimum flow rate is 2.1 m³/h and the maximum flow rate is 62.7 m³/h for a pipe with 50 mm diameter. The measurable range is 2.1 to 62.7 m³/h, and the flow rate range can be set within a range of 0 to 62.7 m³/h.

The measurable range is determined by the flow velocity. According to Table 1, the minimum measurable flow velocity is 0.3 m/s and the maximum measurable flow velocity is 9.0 m/s.

The accuracy-guaranteed range depends on the Reynolds number. Since the volumetric flow rate is measured in this case, refer to Table 3 for accuracy. The accuracy is ±1.5 % of the reading for Reynolds numbers of 30,000 to less than 60,000, and is ±0.7 % rdg for 60,000 or more. For Reynolds numbers from 14,800 to less than 30,000, the flow rate can be measured but its accuracy is not specified.

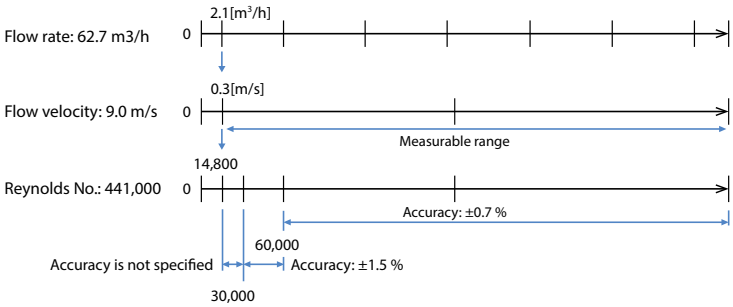

Measured fluid: air **Pipe diameter 15 mm, temperature 20 °C, pressure 0.5 MPa**

According to Table 16, the minimum flow rate is 6.9 Nm³/h and maximum flow rate is 160 Nm³/h. The measurable range is 6.9 to 160 Nm³/h. The flow rate range can be set within a range of 0 to 160 Nm³/h.

The measurable range is determined by the flow velocity. According to Table 2, the minimum measurable flow velocity is $6.1/\sqrt{\rho}$ m/s and the maximum measurable flow velocity is 50 m/s. In this case, the density of air is 7.1 kg/m³, so the measurable flow velocity is between 2.3 to 50 m/s. Because of the default setting of the low flow cutoff described in the remarks under Table 2, the lowest initial flow rate that can be output is 14 Nm³/h, which is about double the minimum measurable flow rate.

The accuracy-guaranteed range depends on the Reynolds number. Since the mass flow rate is being measured in this case, refer to Table 4 for accuracy. The minimum measurable flow velocity is at Reynolds number 12,500. The accuracy is ±4.5 % rdg for 12,500 to less than 18,000, and is ±1.5 % rdg for 18,000 or more.

Regarding the measurement of low flow rates, if the flow rate based on the minimum measurable flow velocity is lower than the minimum accuracy-guaranteed flow rate, it is measured but the accuracy is not guaranteed. If the minimum accuracy-guaranteed flow rate is lower than the flow rate based on the minimum measurable flow velocity, the latter has priority and flow rates below the minimum value cannot be measured, and the accuracy specification for the rates is invalid.

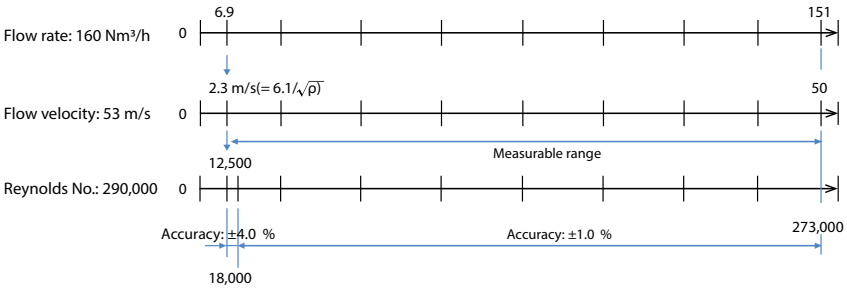

Measured fluid: saturated steam **Pipe diameter 100 mm, temperature 184 °C, pressure 1.0 MPa**

According to Table 17, the minimum flow rate is 387 kg/h and the maximum flow rate is 13777 kg/h. The measurable range is 387 to 13777 kg/h, and the flow rate range can be set within a range of 0 to 13777 kg/h. The measurable range is determined by the flow velocity. According to Table 2, the minimum measurable flow velocity is $6.1/\sqrt{\rho}$ m/s and the maximum measurable flow velocity is 90 m/s. In this case, the density of saturated steam is 5.6 kg/m³, so the measurable flow velocity is between 2.6 to 90 m/s. Because of the default setting of the low flow cutoff described in the remarks under Table 2, the lowest initial flow rate that can be output is 774 kg/h, which is about double the minimum measurable flow rate.

The accuracy-guaranteed range depends on the Reynolds number. Since the mass flow rate is measured in this case, refer to Table 4 for accuracy. The minimum measurable flow velocity is at Reynolds number 86,800. The accuracy is ±2.0 % rdg for 86,800 to less than 120,000, and is ±1.5 % rdg for 120,000 or over. Regarding the measurement of low flow rates, if the flow rate based on the minimum measurable flow velocity is lower than the minimum accuracy-guaranteed flow rate, it is measured but the accuracy is not guaranteed. If the minimum accuracy-guaranteed flow rate is lower than the flow rate based on the minimum measurable flow velocity, the latter has priority and flow rates below the minimum value cannot be measured, and the accuracy specification for the rates is invalid.

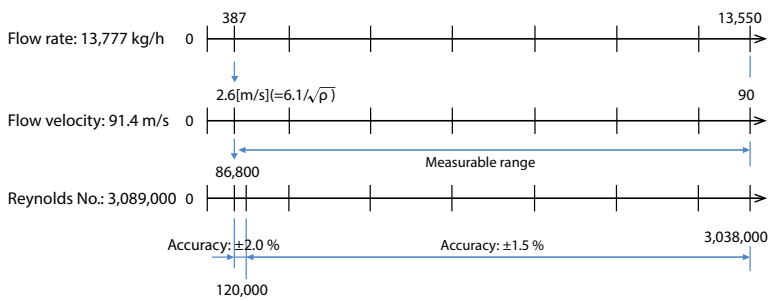

Instructions for Proper Use

This document uses the following symbols to ensure safe use of the device.

⚠WARNING	Warnings are indicated when mishandling of this product might result in death or serious injury.
⚠CAUTION	Cautions are indicated when mishandling of this product might result in minor injury to the user, or only physical damage to the product.

■ Symbol

⚠	Use caution.
⊘	The indicated action is prohibited.
❗	Be sure to follow the indicated instructions.

General Precautions

⚠ Caution	
⚠	For general precautions, refer to JIS Z 8766, Vortex Flowmeters—Methods of Flow Measurement.
⚠	This unit's suitability for use is guaranteed only under the conditions of use on which we based the sizing evaluation that we implemented before delivery. If the conditions of use change, please contact our local branch office or sales office. We will reevaluate the device's suitability for the application.

Warnings and Cautions for Installation

⚠ Warning	
⊘	Do not use the meter for corrosive gases. Corrosive gases may lead to corrosion and external leaks, and consequently cause bodily harm.
⊘	Do not use the meter for a fluid that may corrode the material of the wetted parts of the detector. Doing so may lead to corrosion and external leaks, and consequently cause bodily harm.
❗	In the case of use for fluids that are harmful to the human body, purge the inside of the pipes with inert gas before installing the flowmeter.
❗	For installation in a hazardous area, use the included pressure-resistant packing cable gland and seal plug for wiring.
⊘	Do not energize the unit with the cover open. There is a risk of explosion.
❗	Do not open the cover in a hazardous area while the device is powered.
❗	In hazardous areas and areas with harsh atmospheres, use the small magnet (included) to change the settings without removing the cover of the display.
❗	Make sure that the explosion-proof specifications of this unit satisfy the explosion-proof requirements specification of the site before installing this unit in a hazardous area that requires explosion-proofing.
❗	Follow the wiring procedure specified in the explosion-proof guidelines for hazardous areas.
❗	Make sure that there is no residual pressure in the pipes before mounting this unit on a pipe or removing it from the pipe. Gas leaking from the pipe may cause bodily harm.
⊘	Do not use this unit outside the range of its specified maximum flow velocity, rated pressure, flange rating, and rated temperature. There is a risk of damage to the device that could cause a serious accident.
❗	The connection part of this unit, shutoff valves to be used with this unit, and pipe parts must have the same pressure rating as the main pipe, or a higher rating.
❗	This unit weighs 6 to 140 kg, depending on the model number. Handle this heavy object with care, for example by using a cart when moving or transporting it. Carelessly lifting or dropping it may cause injury or damage.
❗	When connecting a shutoff valve to this unit, make sure to connect the sealing part of the shutoff valve and then conduct a leak test.
❗	If a vortex flowmeter for cryogenic temperature use is installed, use stainless steel bolts and nuts, which resist brittleness at low temperatures.

⚠ Caution	
⊘	Do not use this unit as a step after installation. It may break and cause injury.
❗	Use gloves while installing this unit. Sharp edges may cause injury.
⊘	Keep tools away from the glass window of the converter. The glass may break and cause injury.
❗	Implement an appropriate redundant design in cases where damage can be expected if a problem occurs with this unit.
❗	Use a new gasket when mounting this unit on a pipe. Make sure of the following when selecting the gasket. • It must have sufficient anti-corrosion characteristics for the process fluid. • It must comply with the pressure rating of the mounting location.
❗	Tighten the gasket to the specified torque. Conduct a leak test after tightening the bolts.
⊘	This unit cannot be used with fluids that may corrode the wetted parts of the detector or with slurry fluids (gas-liquid two-phase flow, solid-gas two-phase flow, solid-liquid two-phase or three-phase flow).
⚠	Make sure that the straight pipe length on both the upstream and downstream sides satisfies the requirements of Figure 3 and Table 12.
⚠	Make sure that there are no objects nearby that may cause unbalanced flow velocity distribution, such as valves, strainers, or other obstructions in the flow path.
⚠	For use with liquids, mount the flowmeter on a vertical pipe with the flow direction from the bottom upward so that the liquid completely fills the pipe.
⚠	The inner diameter of this unit is almost the same as that of a schedule 80 pipe. Do not mount the flowmeter in a location where the inner diameter of the pipe is smaller than that of the flowmeter (for example, where schedule 160 pipes are used upstream and downstream from the flowmeter). Doing so can cause measurement error. Although schedule 80 piping with a 100A, 150A, or 200A diameter has a larger inner diameter than that of this unit, the difference is small and we have verified that accuracy will be maintained.
⚠	The inner diameter of the gasket must be larger than that of the flowmeter and the connected pipe. If the gasket protrudes into the flow path, it will interfere with the flow and prevent accurate measurement.
⚠	When the process fluid temperature in a horizontal pipe is 150 °C or higher, mount the flowmeter at a slant of 45–90 degrees to prevent the converter cover from being heated by convection from the pipe. 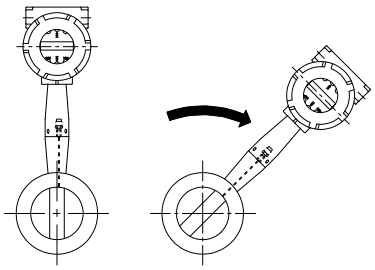

Figure 5. Mounting a Converter for High Temperatures

⚠ Caution

- Install an insertion type thermometer and pressure gauge that protrude into the pipe downstream from this unit. Mounting them upstream from the meter can cause turbulent flow, affecting measurement accuracy.
- Do not wrap thermal insulation beyond the range shown in the figure below, so as not to affect the electronic components.

  For AX2200 or AX2211

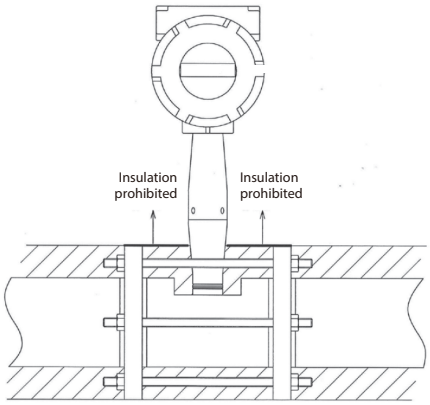

Figure 6. Thermal insulation range for standard and low-temperature models

However, in the case of high-temperature models (i.e., with the model number component "H"), do not wrap with thermal insulation.
If the meter is wrapped, the high temperatures may damage the electronic components.

For AX2222

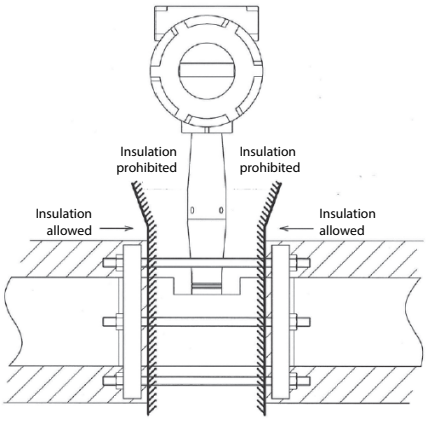

Figure 7. Thermal insulation range for high-temperature models

To protect the pressure sensor, do not wrap thermal insulation around the AX2222 vortex flowmeter. However, for low-temperature models (i.e., with the model number component "C"), thermal insulation may be used up to the outer diameter of the flange (outer diameter of the pipe for the wafer type) to prevent frosting.

- For cryogenic-temperature models, firmly tighten the watertight gland at the wiring connection to prevent condensation at the terminals.
- The flow velocity limits for this unit are specified for each diameter as shown below.
  Do not use the flowmeter at velocities beyond these limits. Otherwise, the device may be damaged.
  Flow Velocity Limits when Measuring Gases and Steam

Diameter	Max. measurable flow velocity (m/s)	Maximum flow velocity (m/s)
15A	50	53
25A	70	75
40A to 200A	90	91.2

Wiring Precautions

⚠ Warning

- Before wiring, be sure to disconnect the power. There is a risk of electrical shock.

⚠ Caution

- Wire properly, in conformance with the specifications. Otherwise, an overcurrent may flow through the circuit, and the resulting burnout can cause equipment damage or malfunction.
- Tighten the terminal block screws to the specified torque when wiring.
- Use a power supply that has overload protection.
- The connection between ground and the ground terminal for the converter should have a maximum resistance of 100 Ω. Improper grounding may cause electrical shock.
- Installation and wiring should be performed by a specialist with proper qualifications for instrumentation and electrical work.
- Make sure that the wiring follows regulations for indoor wiring and technical standards for electrical equipment.
- When installing a remote converter, make sure that the cable connecting the detector with the converter is sufficiently long.
- Make sure that the voltage fluctuation of the power supply does not exceed ±10 % of the supply voltage.
- When the flowmeter is in use, there must be an external means for direct current and commercial power supply current shutoff, as well as an external means of overcurrent protection.
- This unit does not have a lightning arrestor. If a countermeasure against lightning is required, install surge absorbers for the power supply and output wiring.

Precautions for Maintenance

⚠ Warning

- Make sure that there is no residual pressure in the pipe before removing this unit from the pipe for maintenance. Gas leaking from the pipe may cause bodily harm.
- Use a new gasket when replacing an existing device with this one. Otherwise, due to degradation of the gasket, there is a risk of burns caused by leaking high-temperature gas or steam or poisoning caused by leaking toxic gas.
- Do not open the cover of this unit when using it in a hazardous area. There is a risk of explosion.
- Do not open the cover in a hazardous area while the device is powered.
- If a vortex flowmeter for cryogenic temperature use is installed, use stainless steel bolts and nuts, which resist brittleness at low temperatures.

⚠ Caution

- Do not touch this unit immediately after high-temperature fluid such as steam flows through it. There is a risk of burns because this unit may become hot.
- If this unit is used in a hazardous area, regularly check to make sure the rubber packing in the conduit has no cracks or other deterioration. If the rubber packing deteriorates, the explosion-proof performance specifications cannot be satisfied.
- Use gloves while installing this unit. Sharp edges may cause injury.
- The installation location must have enough workspace to conduct maintenance safely and efficiently.

Precautions for Operation

⚠ Warning
For measuring steam, at operation startup, gradually open the valve to allow steam to flow into the pipe where the flowmeter is installed. Do not allow a large amount of steam to suddenly flow into the pipe. Otherwise, a steam hammer may be caused by the collision between condensed water and steam, which can damage the equipment.
Use this unit at a flow rate that does not exceed the maximum process flow velocity specified in the specification. Otherwise, the unit can be damaged.

⚠ Caution
This unit is shipped with factory settings in which the low flow cutoff point is higher than the minimum measurable flow rate calculated by the sizing tool in order to reduce output errors due to pipe vibration. (The minimum flow rate is calculated with no pipe vibration.)
This unit has been set by the low flow cutoff function to fix the flow rate output at zero below a certain flow rate. Also, this unit is shipped with factory settings in which the low flow cutoff is relatively high in order to reduce output errors due to pipe vibration. Because these settings may not match your environment, resetting the low flow cutoff point after installation is recommended.
After installation, set the low flow cutoff when there is no process fluid flow.
Do not set the low flow cutoff to a value lower than the minimum flow rate calculated by the sizing tool.
Use this unit with a process fluid pressure above atmospheric pressure.

Precautions for Operation

⚠ Warning
For measuring steam, at operation startup, gradually open the valve to allow steam to flow into the pipe where the flowmeter is installed. Do not allow a large amount of steam to suddenly flow into the pipe. Otherwise, a steam hammer may be caused by the collision between condensed water and steam, which can damage the equipment.
Use this unit at a flow rate that does not exceed the maximum process flow velocity specified in the specification. Otherwise, the unit can be damaged.

⚠ Caution
This unit is shipped with factory settings in which the low flow cutoff point is higher than the minimum measurable flow rate calculated by the sizing tool in order to reduce output errors due to pipe vibration. (The minimum flow rate is calculated with no pipe vibration.)
This unit has been set by the low flow cutoff function to fix the flow rate output at zero below a certain flow rate. Also, this unit is shipped with factory settings in which the low flow cutoff is relatively high in order to reduce output errors due to pipe vibration. Because these settings may not match your environment, resetting the low flow cutoff point after installation is recommended.
After installation, set the low flow cutoff when there is no process fluid flow.
Use this unit with a process fluid pressure above atmospheric pressure.

Power Supply and Output Wiring Diagram

24 V DC Loop Power Supply Models (2-Wire System)

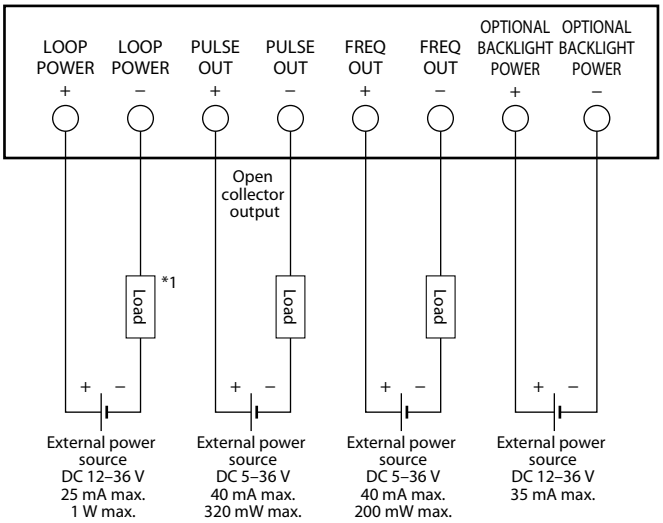

*For the amount of load, refer to Figure 9

Figure 8. 24 V DC Loop Power Supply Type (2-Wire System) Wiring Diagram

When a 12–36 V DC power supply is connected to the power supply terminals (LOOP POWER +/–), this unit operates and indicates outputs on the LCD display.
For the 2-wire system instrumentation, the current is changed to 4–20 mA DC and output according to the measurement results of this unit.
To output pulses, connect an additional power supply and load resistance to the pulse output terminals (PULSE OUT +/–) to use this unit.
Frequency output is used for output to an external counter. The mass flow rate, volumetric flow rate, temperature, pressure, and calculated density can be assigned in a range of 1–10,000 Hz and output as frequency output.
To use frequency output, connect an additional power supply and load resistance to the frequency output terminals (FREQ OUT +/–).
If the backlight is used, connect an additional power supply to the backlight terminals (OPTIONAL BACKLIGHT POWER +/–) and use it within 12-36 V/35 mA DC.

24 V DC External Power Supply Type

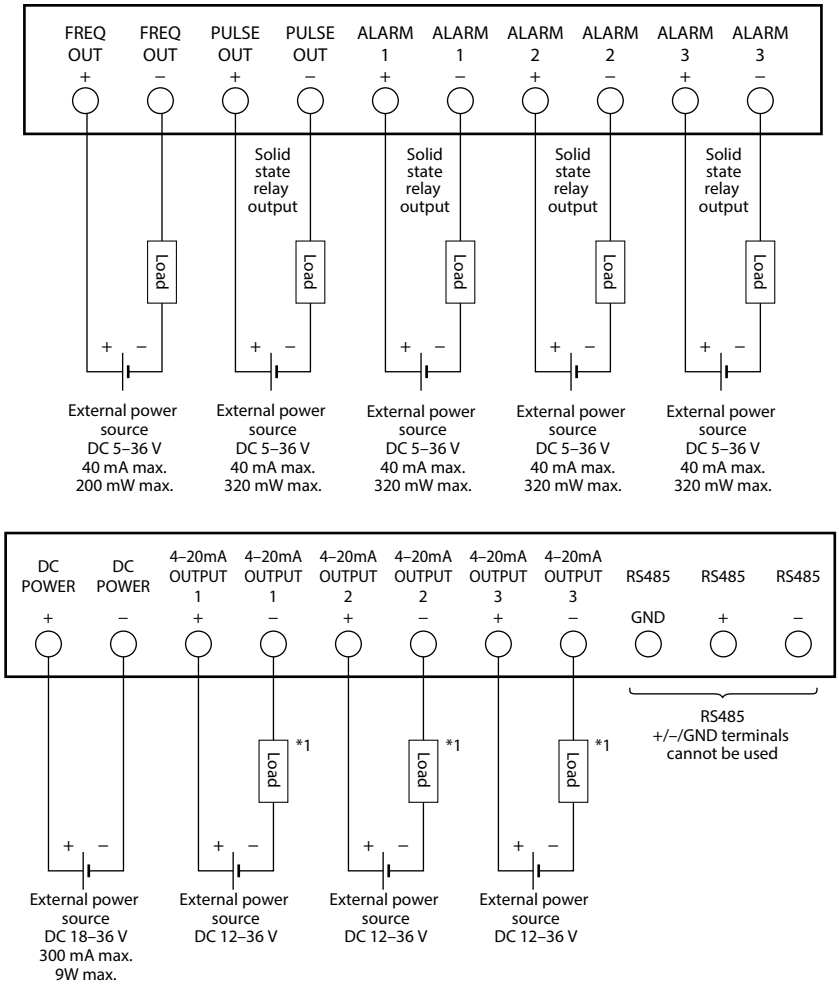

*For the amount of load, refer to Figure 9

Figure 9. 24 V DC External Power Supply Type Wiring Diagram

If an 18–36 V DC power supply is connected to the power supply terminals (DC POWER +/–), this unit operates and indicates outputs on the LCD display.
If 4–20 mA output is used, connect an additional power supply and load resistance to the 4–20 mA output terminals (4–20 mA OUTPUT 1-3 +/–) and use it within the range shown in Figure 6.
To output pulses, connect an additional power supply and load resistance to the pulse output terminals (PULSE OUT +/–).
To output alarms, connect an additional power supply and load resistance to the alarm output terminals (ALARM 1-3 +/–).
Frequency output is used for output to an external counter. The mass flow rate, volumetric flow rate, temperature, pressure, and calculated density can be assigned in a range of 1–10,000 Hz and output as frequency output.
To use frequency output, connect an additional power supply and load resistance to the frequency output terminals (FREQ OUT +/–).

100 V AC External Power Supply Type

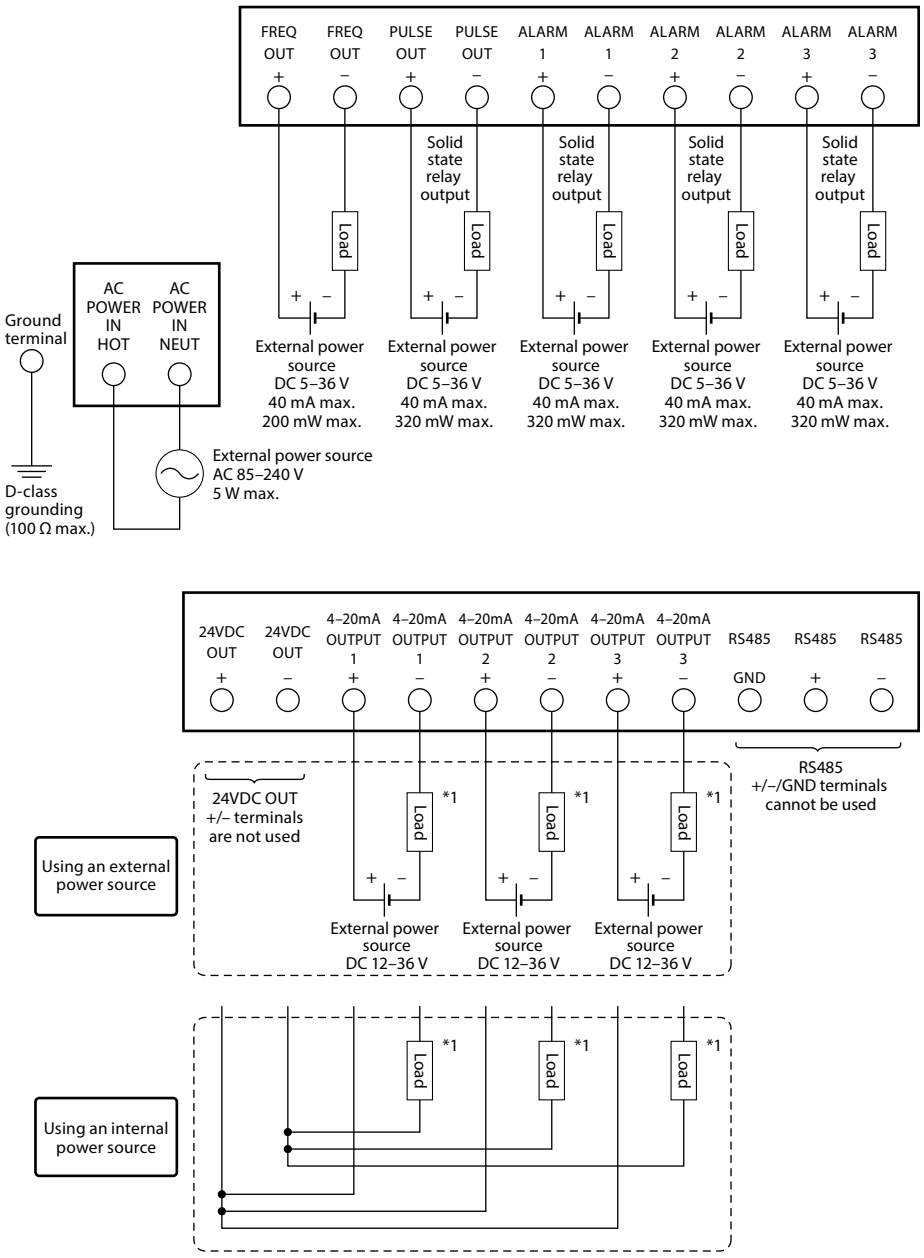

*For the amount of load, refer to Figure 9

Figure 10. 100 V AC External Power Supply Type Wiring Diagram

If an 85–240 V AC power supply is connected to the power supply terminals (AC POWER IN HOT/NEUT), this unit operates and indicates outputs on the LCD display.
If a 4–20 mA output is used, connect an additional power supply and load resistance to the 4–20 mA output terminals (4–20 mA OUTPUT 1-3 +/–) and use it within the range shown in Figure 7.
To output pulses, connect an additional power supply and load resistance to the pulse output terminals (PULSE OUT +/–).
To output alarms, connect an additional power supply and load resistance to the alarm output terminals (ALARM 1-3 +/–).
Frequency output is used for output to an external counter. The mass flow rate, volumetric flow rate, temperature, pressure, and calculated density output can be assigned in a range of 1–10,000 Hz and output as frequency output.
To use frequency output, connect an additional power supply and load resistance to the frequency output terminals (FREQ OUT +/–).
Also, 24 V DC for this unit's instrumentation is supplied from the 24 V output terminals (24VDC OUT +/–) on the terminal block. Therefore, you can use it as an application power supply for various outputs by wiring inside the terminal box of this unit. In this case, however, note that the outputs using that power supply will be non-isolated outputs.

Supply Voltage and Load Resistance of Analog Output

The supply voltage and load resistance must be within the range shown below.

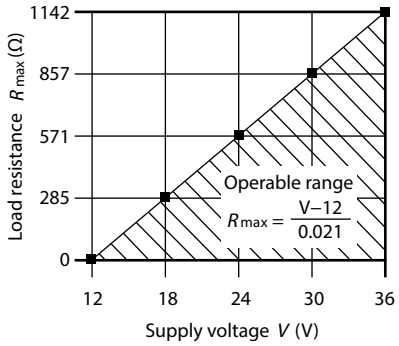

Figure 11. Supply Voltage and Load Resistance of Analog Output

Model Selection Table

		Basic model No.
Basic model No.	Volumetric flowmeter (for measuring liquids, gases, and steam)	AX2200
	Flowmeter with temperature compensation function (for measuring saturated steam)	AX2211
	Flowmeter with temperature/pressure compensation (for gas and superheated steam)	AX2222

Selection specifications — Additional selection specifications — Additional specifications (Up to 5)

Selection specifications	Diameter	15 mm	015
		25 mm	025
		40 mm	040
		50 mm	050
		80 mm	080
		100 mm	100
		150 mm (flange connection only)	150
		200 mm (flange connection only)	200
	Body material	SUS316L	S
	Flange rating / face to face	Wafer connection (ANSI 150#/300#/600#, JIS10K/20K/30K/40K) For flange (check the corresponding model number in tables 20 and 21 for dimensions)	W□
		Flange connection JIS 10K (check the corresponding model number in the external dimensions drawing)	□1
		Flange connection JIS 20K (check the corresponding model number in the external dimensions drawing)	□2
		Flange connection JIS 30K (check the corresponding model number in the external dimensions drawing)	□3
		Flange connection, ANSI 150#	FA
		Flange connection, ANSI 300#	FB
		Flange connection, ANSI 600#	FC

Optional selection specifications	Housing	Integral type: NEMA 4X/IP66	LE
		Remote type: NEMA 4X/IP66, cable length 3 m	R1
		Remote type: NEMA 4X/IP66, cable length 5 m	R2
		Remote type: NEMA 4X/IP66, cable length 10 m	R3
		Remote type: NEMA 4X/IP66, cable length 15 m	R4
		Remote type: NEMA 4X/IP66, cable length 20 m	R6
		Remote type: NEMA 4X/IP66, cable length 25 m	R7
		Remote type: NEMA 4X/IP66, cable length 30 m	R8
		Remote type: NEMA 4X/IP66, cable length 35 m	R9
	Display / setting device	Available	D
	Power supply / output / communication	Power supply: 24 V DC / Loop Powered Output: analog (4 to 20 mA), pulse, frequency	1A
		Power supply: 24 V DC external power supply Output: Analog (4 to 20 mA), alarm, pulse, frequency	2B
		Power supply: 24 V DC external power supply Output: Analog (4 to 20 mA) × 3, alarms × 3, pulse, frequency	2D
		Power supply: 100 to 240 V AC (50/60 Hz) Output: Analog (4 to 20 mA), alarm, pulse, frequency	3B
		Power supply: 100 to 240 V AC (50/60 Hz) Output: Analog (4 to 20 mA) × 3, alarms × 3, pulse, frequency	3D
	Temperature specifications	Standard (process fluid temperature: -50 to +260 °C)	S
		High temperature (process fluid temperature: -50 to +400 °C) *1	H
		Cryogenic temperature (process fluid temperature: -200 to +50 °C)	C
	Pressure specifications *2	No pressure sensor	X
		Pressure during use: 0.2 MPa (abs) or less *3	A
		Pressure during use: 0.7 MPa (abs) or less	B
		Pressure during use: 2.0 MPa (abs) or less	C
		Pressure during use: 3.4 MPa (abs) or less	D
		Pressure during use: 10.0 MPa (abs) or less	E

Optional specifications	Additional specifications	Wetted Parts Material Certificate	MC
		Pressure Resistance Inspection Certificate	PT
		NACE MR0103 and MR0175 Certificates	NC
		Oil and Water Free Finish Certificate (U.S. CGA G-4.1 standard)	O2
		Strength calculation sheet	C1
		None	XX

*1. For high-temperature models (temperature specification: H), flange rating J1 or Y1 (JIS 10K flange connection) cannot be selected.
*2. For basic model numbers AX2200 and AX2211, select pressure specification X (no pressure sensor). For basic model number AX2222, do not select pressure specification X (no pressure sensor).
*3. When the pressure specification model number "A" (pressure during use: 0.2 MPa (abs) or less) is selected, the additional specifications model number "SA" (AIST Standard Calibration, Traceability certificate) cannot be selected. The pressure during actual flow calibration may damage the pressure sensor.
*4. Select the customer setting if settings other than the range of the first analog (flow rate output) and the pulse weight are set at the factory.

External Dimensions

<Integral type, flange-mounted>

(Unit: mm)

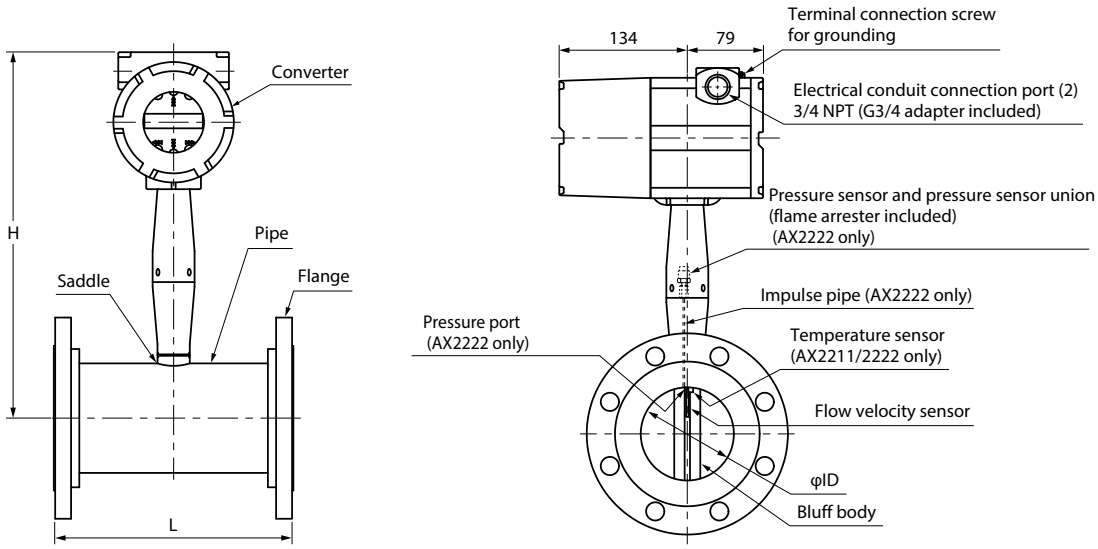

Figure 12. Integral Type, with Flange

Table 18. Dimension Table of Flange Connection Type for JIS Flanges (face to face code: J)

Diameter (mm)	H (mm)	Model No.: J1				Model No.: J2				Model No.: J3			
		L (mm)	φID (mm)	Mass (kg)		L (mm)	φID (mm)	Mass (kg)		L (mm)	φID (mm)	Mass (kg)	
				Integral	Remote			Integral	Remote			Integral	Remote
15	342	142	13.9	6	5	142	13.9	6	5	152	13.9	7	6
25	342	152	24.3	7	6	152	24.3	7	6	158	24.3	8	7
40	349	171	38.1	8	7	175	38.1	9	8	185	38.1	11	10
50	355	173	49.3	9	8	181	49.3	10	9	191	49.3	12	11
80	369	219	73.7	13	12	233	73.7	16	15	243	73.7	20	19
100	382	250	97.2	17	16	264	97.2	21	20	274	97.2	27	26
150	409	322	146.3	33	32	342	146.3	42	41	352	146.3	56	55
200	434	350	193.7	46	45	350	193.7	59	58	350	193.7	77	76

Table 19. Dimension Table of Flange Connection Type for JIS Flanges (face to face code: Y)

Diameter (mm)	H (mm)	Model No.: Y1				Model No.: Y2			
		L (mm)	φID (mm)	Mass (kg)		L (mm)	φID (mm)	Mass (kg)	
				Integral	Remote			Integral	Remote
15	342	130	13.9	6	5	130	13.9	6	5
25	342	150	24.3	7	6	150	24.3	7	6
40	349	150	38.1	8	7	150	38.1	9	8
50	355	170	49.3	9	8	170	49.3	9	8
80	369	200	73.7	13	12	200	73.7	16	15
100	382	220	97.2	16	15	220	97.2	20	19
150	409	270	146.3	30	29	270	146.3	39	38
200	434	310	193.7	44	43	310	193.7	56	55

Table 20. Dimension Table of Flange Connection Type for ANSI Flanges

Diameter (mm)	H (mm)	Model No.: FA				Model No.: FB				Model No.: FC			
		L (mm)	φID (mm)	Mass (kg)		L (mm)	φID (mm)	Mass (kg)		L (mm)	φID (mm)	Mass (kg)	
				Integral	Remote			Integral	Remote			Integral	Remote
15	342	116	13.9	6	5	116	13.9	6	5	116	13.9	6	5
25	342	126	24.3	7	6	126	24.3	8	7	126	24.3	8	7
40	349	140	38.1	7	6	140	38.1	11	10	140	38.1	12	11
50	355	153	49.3	9	8	153	49.3	13	12	153	49.3	16	15
80	369	175	73.7	13	12	175	73.7	18	17	175	73.7	26	25
100	382	203	97.2	20	19	203	97.2	28	27	203	97.2	44	43
150	409	229	146.4	22	21	229	146.4	44	43	229	146.4	81	80
200	434	267	193.7	33	32	267	193.7	68	67	267	193.7	136	135

<Integral type, wafer-mounted>

(Unit: mm)

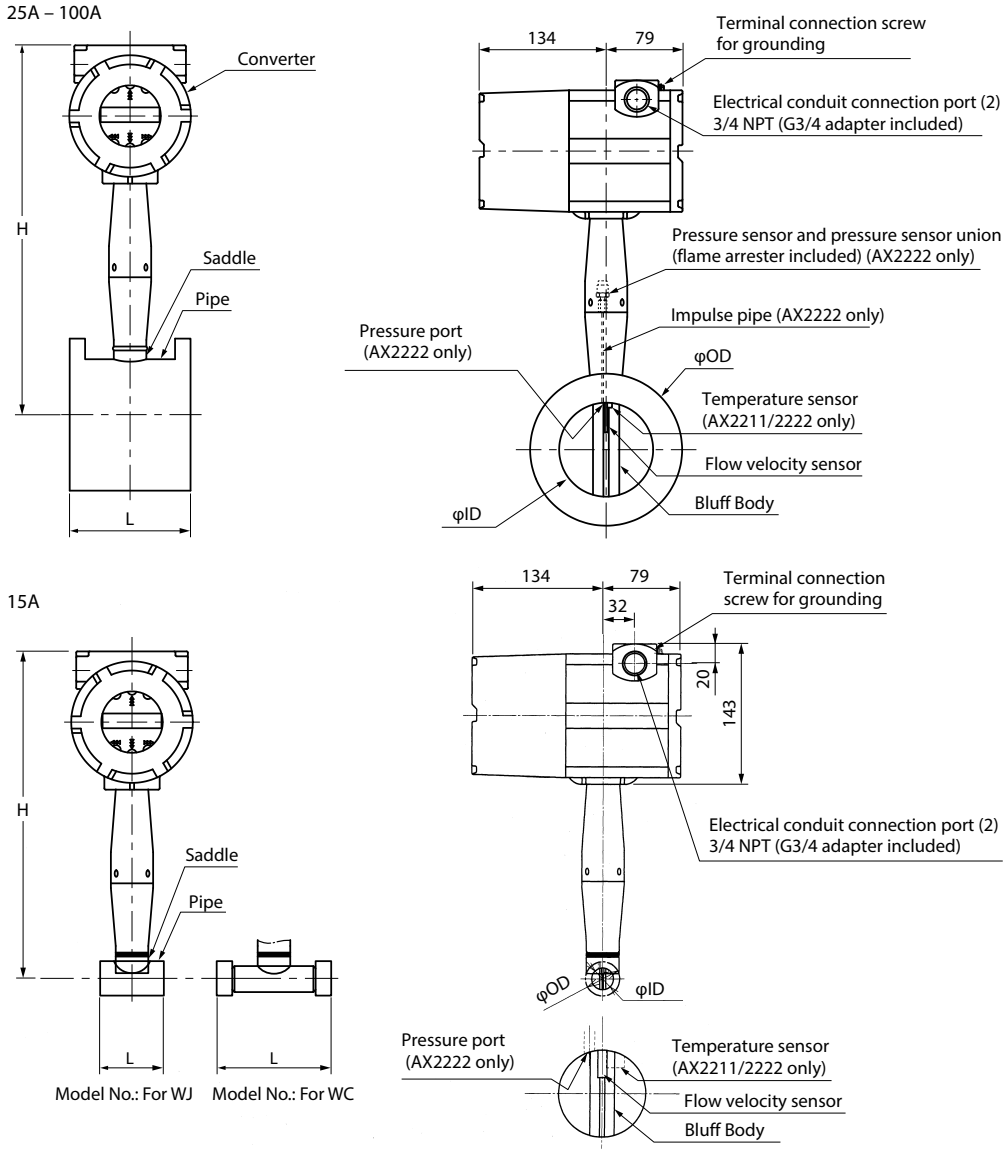

Figure 13. Integral Type, with Wafer

Table 21. Dimension Table of Wafer Connection Type for JIS Flanges

Diameter (mm)	H (mm)	Model No.: WJ					Model No.: WY				
		L (mm)	φOD (mm)	φID (mm)	Mass (kg)		L (mm)	φOD (mm)	φID (mm)	Mass (kg)	
					Integral	Remote				Integral	Remote
15	342	65	35.1	13.9	5	4	70	35.1	13.9	5	4
25	342	65	50.8	24.3	5	4	70	50.8	24.3	5	4
40	349	80	73.2	38.1	6	5	70	73.2	38.1	6	5
50	355	80	91.9	49.3	7	6	75	91.9	49.3	7	6
80	369	100	127.0	73.7	11	10	100	127.0	73.7	11	10
100	382	125	157.2	97.2	16	15	120	157.2	97.2	15	14

Table 22. Dimension Table of Wafer Connection Type for ANSI Flanges

Diameter (mm)	H (mm)	Model No.: WC				
		L (mm)	φOD (mm)	φID (mm)	Mass (kg)	
					Integral	Remote
15	342	116	35.1	13.9	5	4
25	342	71	50.8	24.3	5	4
40	349	71	73.2	38.1	6	5
50	355	76	91.9	49.3	7	6
80	369	102	127.0	73.7	11	10
100	382	119	157.2	97.2	15	14

<Remote Converter>

(Unit: mm)

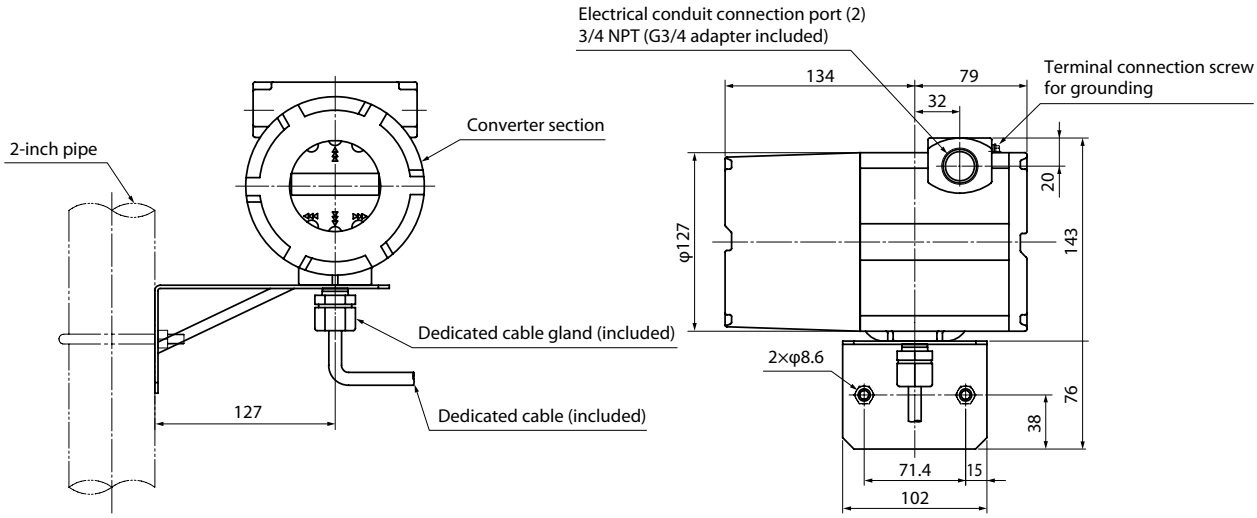

Figure 14. Remote Converter

<Remote type, flange-mounted>

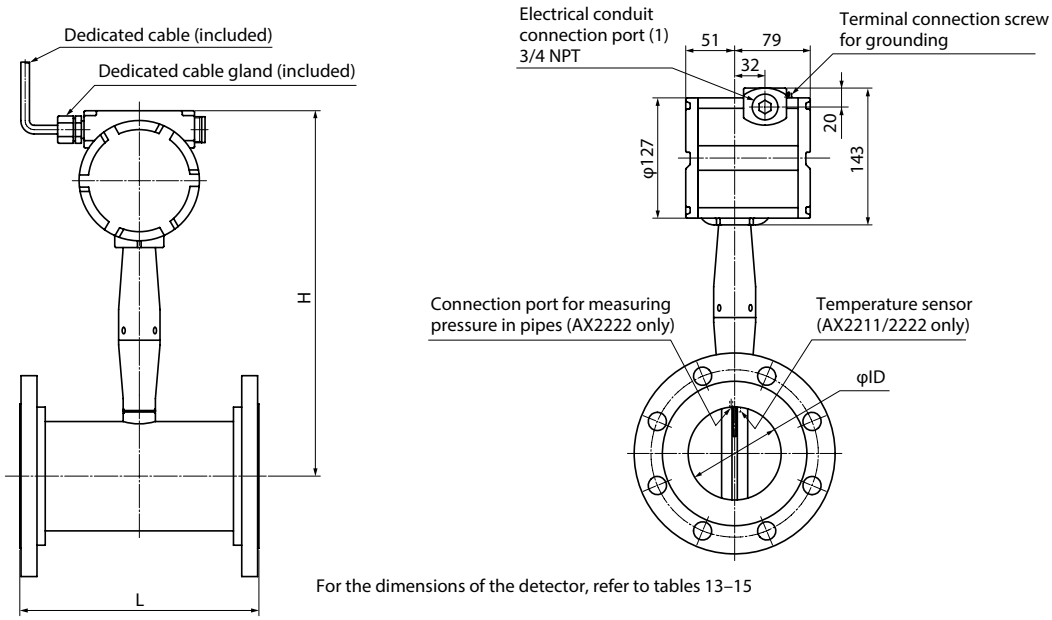

For the dimensions of the detector, refer to tables 13–15

Figure 15. Remote Type, with Flange

<Remote type, wafer-mounted>

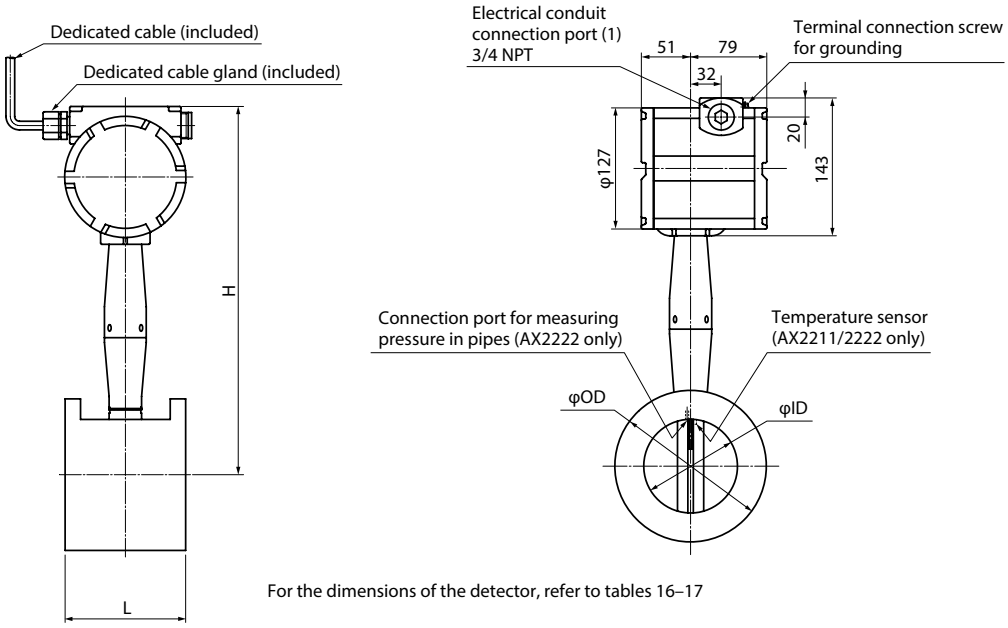

For the dimensions of the detector, refer to tables 16–17

Figure 16. Remote Type, with Wafer <Cable Gland>

(Unit: mm)

▪ **Sealing Plug**

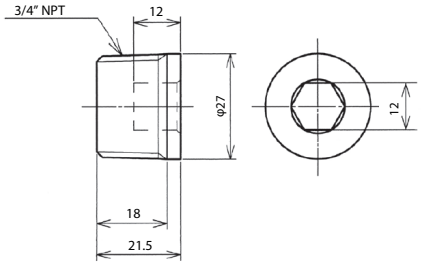

Figure 17. Sealing Plug

Inline Multivariable Vortex Flowmeter Contact Sheet

Company name		Date filled	
Representative		Contact	
Desired delivery date		Our sales representative	

* Mandatory items are marked with ✳.

Fluid Conditions

Steam ✳	☐ Saturated steam, ☐ Superheated steam				
Gas✳	Air, nitrogen, oxygen, hydrogen, carbon monoxide, carbon dioxide, helium, neon, argon, krypton, xenon, methane, ethylene, ethane, propylene, propane, pentane, octane, benzene, methanol, ethanol, propanol, chlorine, methyl chloride, ethyl chloride, chloroform, carbon tetrachloride, hydrochloric acid, hydrogen sulphide, ammonia, nitrogen monoxide, nitrogen dioxide, sulfur dioxide, ( )				
Fluid ✳	Water, 7% salt water, ammonium hydroxide, ammonia, methanol, ethanol, butanol, ethylene glycol, hexane, acetone, benzene, dioxane, gasoline, IPA, methylbenzene, naphthalene, liquefaction nitrogen, lox, liquefaction propane, ethylene, propylene, biphenyl, phosgene ( )				
Density ✳		Viscosity ✳		Compressibility factor of gas ✳	

Note: Because the physical properties of fluids in the choices listed in the above table are included in the sizing tool of this unit, you do not need to fill those in.

Item	Minimum (lowest)	Normal	Maximum (highest)	Unit
Flow rate	✳	✳	✳	kg/h
Pressure	✳	✳	✳	kPa
Temperature	✳	✳	✳	°C

Note: For saturated steam, you can enter either a pressure or temperature.

Detector Specification

Diameter ✳	☐ 15A, ☐ 25A, ☐ 40A, ☐ 50A, ☐ 80A, ☐ 100A, ☐ 150A, ☐ 200A	
Pipe standard ✳	Specify by standard: ☐ STPG, ☐ SGP, ☐ SUS-TP, ☐ Other ( ) Schedule No.: ☐ 10, ☐ 20, ☐ 40, ☐ 60, ☐ 80	
	Specify by size: inner diameter of pipe (_____ [mm]) Thickness (_____ [mm])	
Pipe connection ✳	☐ Wafer	☐ JIS10KRF, ☐ JIS20KRF, ☐ JIS30KRF, ☐ JIS40KRF, ☐ ANSI150#, ☐ ANSI300#, ☐ ANSI600#
	☐ Flange	☐ JIS10KRF, ☐ JIS20KRF, ☐ JIS30KRF, ☐ ANSI150#, ☐ ANSI300#, ☐ ANSI600#
Installation	☐ Horizontal pipe, ☐ Vertical pipe	
Straight pipe length	Upstream side (_____ [mm]) = _____ D	Downstream side (_____ [mm]) = _____ D

Converter Specifications

	Power supply	Output
Power supply	☐ 24 V DC / loop power supply	4–20 mA Analog output, pulse output, frequency output
Output	☐ 24 V DC / external power supply	4–20 mA Analog output × 3, pulse output, frequency output, alarm output × 3
	☐ 100 V AC / external power supply	4-20 mA Analog output × 3 , pulse output, frequency output, alarm output × 3

Environmental Conditions

Ambient temperature	(°C)	Ambient humidity	(% RH)
Hazardous area	☐ Explosion-proof (zone 0, zone 1, zone 2), ☐ High-pressure gas safety facilities, ☐ Other ( )		
Protection class	NEMA 4X, IP66 (waterproof/dustproof specifications)		

Please read "Terms and Conditions" from the following URL before ordering and use.

https://www.azbil.com/products/factory/order.html

Specifications are subject to change without notice.

azbil

Azbil Corporation
Advanced Automation Company

1-12-2 Kawana, Fujisawa
Kanagawa 251-8522 Japan
URL: https://www.azbil.com/

Product of:
Azbil VorTek, LLC

8475 W I-25 Frontage Road Suite 300
Longmont, CO 80504, USA

1st Edition: Nov. 2017
2nd Edition: June 2020